Radiant Heating

Recommended use and operating limits available in the technical datasheets on our Internet site

Study of gas fired radiant plaque heaters

Institute for technical equipment for buildings Dresden
University of applied science – Zittau – Görlitz

MM Oschatz - Hartmann – Werdin – Felsmann – Bolsius

ELVHIS research project:

Gas fired radiant plaque heaters in modern industrial buildings

During renovation and building projects, infrared radiant plaque heaters play an important role in heating industrial buildings and shop floors. In 2011, with the aim of bringing existing studies of radiant luminous panels up to date, the German department of ELVHIS awarded the Dresden Institute for technical equipment of buildings and the University Zittau/Görlitz the following research project: what results are obtained for gas fired radiant plaque heaters with an indirect evacuation system for the combustion products in a modern industrial building, in terms of energy efficiency, thermal comfort and air quality?

Throughout the heating season, measurements were made in 10 representative industrial buildings built between 2004 and 2009. These values were further more checked on the basis of simulation calculations over a period of use of one year. This report gives an overview of the results of the study*.

* ELVHIS measurement campaign. Thermal comfort in modern industrial buildings heated by gas fired radiant plaque heaters. (Mr. Bolsius and Oschatz)
ELVHIS measurement campaign. Quality of ambient air in modern industrial buildings heated by gas fired radiant plaque heaters (Mr. Bolsius)

THERMAL COMFORT IS RAPIDLY ATTAINED

Mark: Good

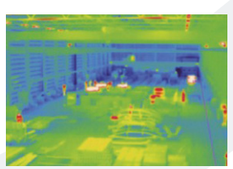

For the thermal comfort felt in the occupied area and/or the work area of 10 industrial buildings, the mark “good” was awarded.

In most of the buildings examined, no significant air movement was observed in the occupied area. The infrared radiation from the radiant plaque heater causes an immediate increase in radiation temperature and therefore in the perceived temperature, and does so even when the air temperature is relatively low. In the light of the results obtained, radiant plaque heaters produce a homogeneous temperature distribution in industrial buildings. In a similar way, local heating for each area can be set up using this system. This type of point heating is often needed on production floors and in stores.

AIR QUALITY IS EXCELLENT

Mark: From good to very good!

The air quality in all the industrial buildings examined (including those where a lot of welding work is carried out) is between “good” and “very good”. In all cases, actual air renewal is sufficient to ensure an air quality between “good” and “very good” in the occupied and/or work areas, with heating running. Measured carbon dioxide and carbon monoxide levels are much lower than the maximum admissible values. They are therefore considered to be non-critical. The measured concentration of nitrogen oxide was negligible in all cases. In as much as the air evacuation system was designed and installed in compliance with standard EN 13410, the results for the measurement and simulation of air quality show that the combustion products from radiant plaque heaters are extracted safely by the building’s evacuation system. Given the very good quality of the air in the buildings examined, it appears relevant from an energy point of view to modulate the extraction volume rate for appliances having several power levels.

ENERGY EFFICIENCY GUARANTEED!

Mark: Very good!

During the second stage of the research, simulation calculations enables the ITG to examine among other things the annual energy consumption of the radiant plaque heaters installed in 3 of the 10 buildings. In general, decentralised radiant plaque heaters have an advantage in energy consumption.

The heating power offered by these products can easily be adapted to the usual requirements of industrial buildings, with a supply of heat limited in time and space. With the effects of direct radiation from appliances placed at the ceiling, the air temperature measured in the buildings during the heating period is 2 K above the perceived temperature setting and between 1 and 3 K below the floor temperature.

In addition, stable air stratification with a low temperature gradient was observed in the buildings, outside the vicinity of doors.

The lower ambient air temperature in the occupied area, coupled with the low temperature gradient over the height of the room, are proof that radiant plaque heating systems give greater energy efficiency in large volumes.

European Leading Association of Gas fired Radiant Heater Manufacturers.
As an association of recognised public utility and representing the interests of European radiant infrared gas heater manufacturers, since it was founded in 1994 ELVHIS has enjoyed numerous successes on a European scale. In accordance with the aims of the association, namely to promote research and development, the circulation of information on advanced technologies, fields of application and the particular advantages of industrial building heating, ELVHIS has made a name for itself as partner and spokesman to the European Commission and the European parliament. Thus it has actively contributed to the setting up and financing of products included in CEN/TC 180.
Special standards offer engineers, installers and authorities from all over Europe a legal framework for the use of this effective technology.
Currently, the greatest market challenges lie for example in the European ErP (Energy related Products) directive on eco-design and its consequences on radiant heating.
ELVHIS e.V - Dr. Norbert Burger, General Secretary ELVHIS Marienburger Straße 15, 50968 Köln

SRII RADIANT PLAQUE HEATER

SOLUTION PARTICULARLY SUITED TO HEATING BUILDINGS:

- high
- poorly insulated
- with high air renewal rate

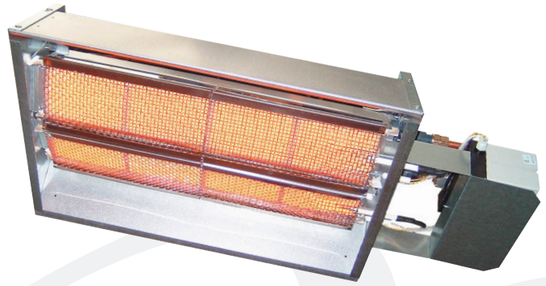

Technical data can be consulted on **www.edibatec.com**

"The technical description of the product, the clear and detailed explanations on how it works were determining criteria for choosing Solaronics appliances. The dimensions of the appliances, with their wide radiation area, were convincing for their better distribution in heating areas. They provided a quick response to requirements. Heating and gas consumption matched the stated performances. They are very easy to use and are well adapted to the demand initially formulated."

Patrick BEAULIEU, Manager of the sports centre SQUASH TEN DU VERGER

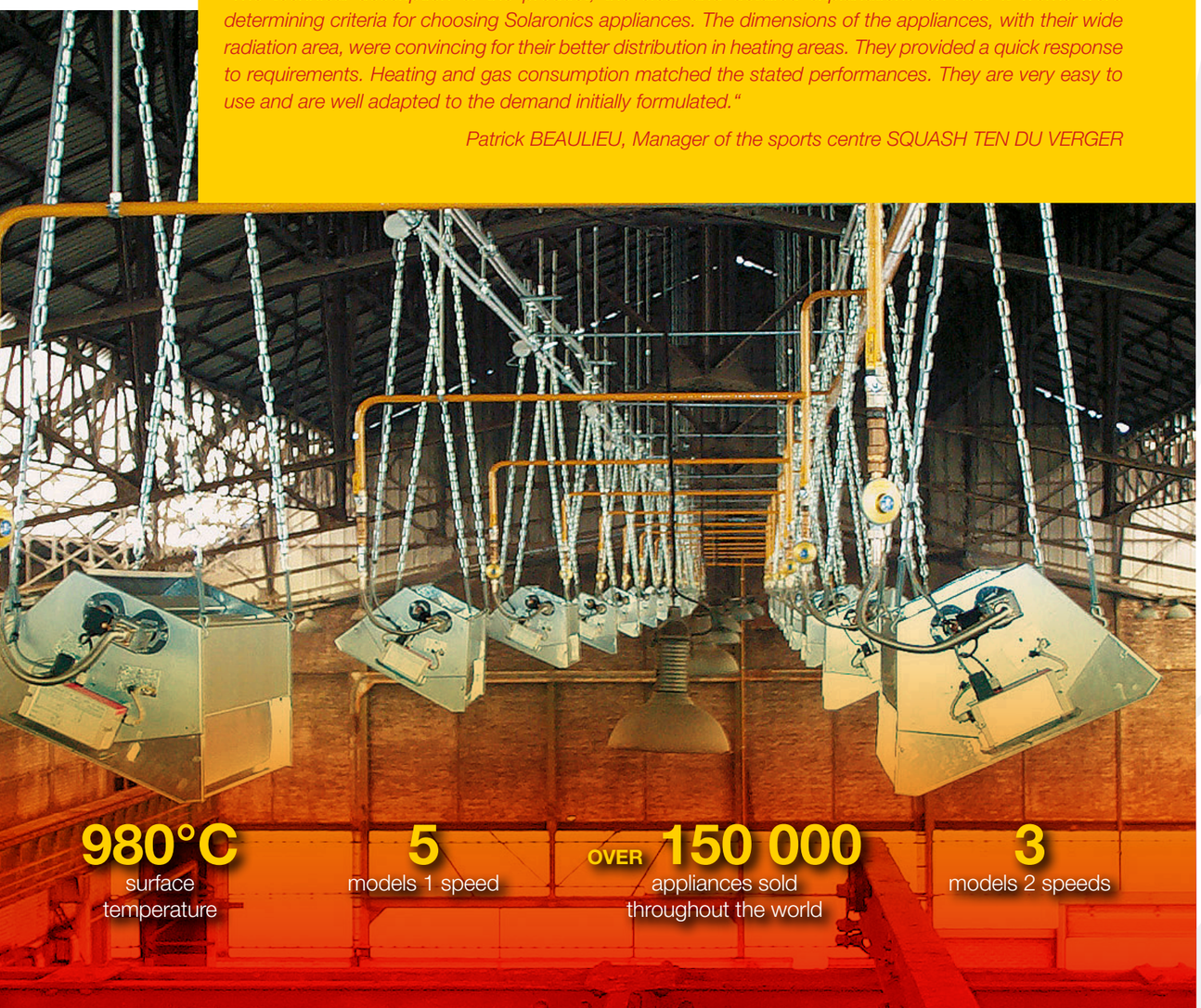

FAST WARM UP **Simple maintenance**

ECONOMICAL AND COMFORTABLE SOLUTION

SUITABLE FOR BUILDINGS EQUIPPED WITH OVERHEAD CRANES

Simple to use Anti-vibration springs

SIMPLE DESIGN LONG LIFE

Energy savings of 25% compared with traditional systems

Reliable heating Overall, area or workstation heating

CLASS 4* NOx CLASS 4

MADE IN FRANCE FABRICATION FRANÇAISE

*Class 4: < 100 mg/kWh

8 models from 6.2 to 25.7 kW

Available for natural gas or propane gas G31

Burner composed of:

- Distributor to homogenise the pre-heated air-gas mixture over the entire length of the burner
- High temperature honeycombed ceramic plates, patented by Solaronics
- Refractory stainless steel screen with high emission power

Ionisation electrode flame control

Remote electrical ignition system by refractory steel electrode

Aluminised steel side reflectors

Safety solenoid valve for each burner

APPLICATIONS

Industrial buildings | Production shop floors | Car garages | Sports/leisure centres | Exhibition halls and arenas | Storage depots

REFERENCES

Alstom | ArcelorMittal | Bombardier | SNCF | Hannecard Forges Dembiermont | Coca-Cola | Geneva International Airport

MAIN COMPONENTS

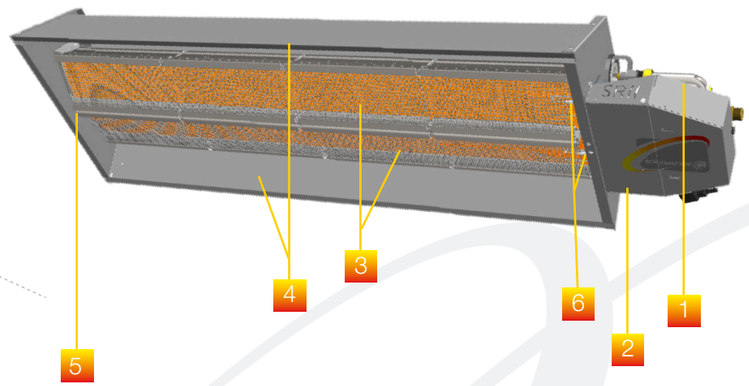

1 Gas line
2 Control and safety box
3 Burners
4 Side reflectors
5 End reflector
6 Platinum electrodes

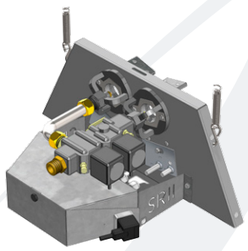

Burner detail

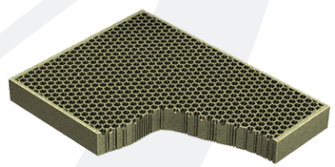

Ceramic plate detail

INSTALLATION PRINCIPLE

Provide an air supply of 10 m³ new air per kW installed to dilute the emissions in the ambient atmosphere

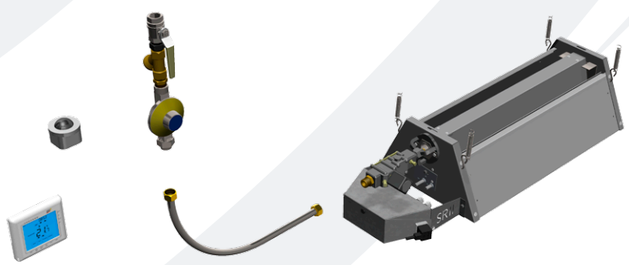

OVERHEAD CRANE

For installation above a travelling crane at less than 1 metre, provide thermal insulation for the crane motor

Appliances are delivered with 4 anti-vibration springs, 4 fixing brackets and 1 electrical connector. When the electrical supply has an impedance earthed neutral of the IT type, provide an isolation transformer

TECHNICAL CHARACTERISTICS

		1 SPEED					2 SPEEDS		
		SRII 21	SRII 31	SRII 41	SRII 61	SRII 81	SRII 42	SRII 62	SRII 82
Heating value LHV	kW	6.20	9.75	12.80	19.50	25.70	12.40	19.50	25.70
G20 gas flow rate	m³/h	0.66	1.03	1.36	2.06	2.72	1.31	2.06	2.72
G25 gas flow rate	m³/h	0.76	1.20	1.57	2.40	3.16	1.52	2.40	3.16
G31 gas flow rate	kg/h	0.48	0.76	1.00	1.52	2.00	0.97	1.52	2.00
Electrical supply		1 x 230 V + N - 50 Hz							
Electrical power	VA	15					30		

DIMENSIONS

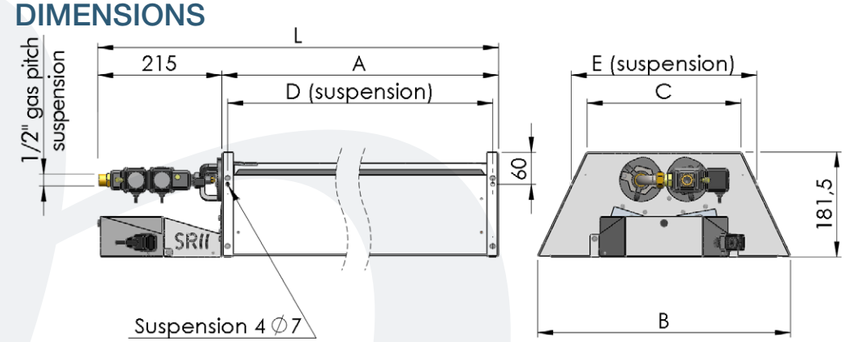

		SRII 21	SRII 31	SRII 41	SRII 61	SRII 81	SRII 42	SRII 62	SRII 82
Total length (L)	mm	813	1 082	1 349	1 082	1 349	813	1 082	1 349
Burner body length (A)	mm	598	867	1 134	867	1 134	598	867	1 134
Width below (B)	mm	315	315	315	435	435	435	435	435
Width above (C)	mm	150	150	150	270	270	270	270	270
Between suspension centres (D)	mm	578	847	1 114	847	1 114	578	847	1 114
Between suspension centres (E)	mm	200	200	200	320	320	320	320	320
Mass	kg	11	13	15	18,5	22	15	18,5	22

RECOMMENDED FIXING HEIGHT

		SRII 21	SRII 31	SRII 41	SRII 61	SRII 81	SRII 42	SRII 62	SRII 82
Recommended minimum height	m	4	4	5	6	7	5	6	7
Recommended maximum height	m	5	5	6	7	9	6	7	9

The power, number, mounting height and position of SRII radiant plaque heaters must be suitably adapted to the requirements of the installation.

For more information on the **SRII radiant plaque heater**, scan this QR code with your smartphone or see our Internet site

ENCASED SRII RADIANT PLAQUE HEATER

"AESTHETIC" SOLUTION FOR HEATING BUILDINGS:

- of large volume
- poorly insulated
- with high air renewal rate

Technical data can be consulted on **www.edibatec.com**

MAIN COMPONENTS

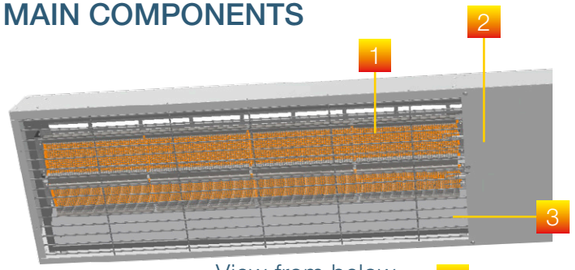

View from below

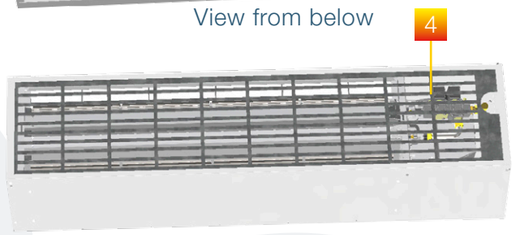

View from top

1 Gas panel SRII plaque heater
2 Covering
3 Lower protection grille
4 Upper protection grille

*Class 4: < 100 mg/kWh

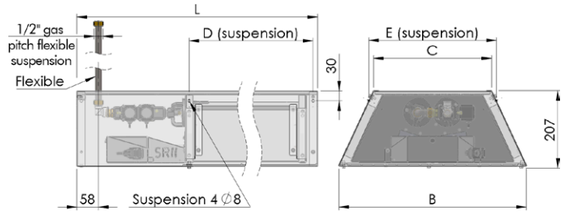

TECHNICAL CHARACTERISTICS

		1 SPEED					2 SPEEDS		
		SRII 21	SRII 31	SRII 41	SRII 61	SRII 81	SRII 42	SRII 62	SRII 82
Heating value LHV	kW	6.20	9.75	12.80	19.50	25.70	12.40	19.50	25.70
G20 gas flow rate	m^3/h	0.66	1.03	1.36	2.06	2.72	1.31	2.06	2.72
G25 gas flow rate	m^3/h	0.76	1.20	1.57	2.40	3.16	1.52	2.40	3.16
G31 gas flow rate	kg/h	0.48	0.76	1.00	1.52	2.00	0.97	1.52	2.00
Gas connection		1/2" - Gas pitch female cylindrical							
Electrical supply		1 x 230 V + N - 50 Hz							
Electrical power	VA	15					30		

DIMENSIONS

		SRII 21	SRII 31	SRII 41	SRII 61	SRII 81	SRII 42	SRII 62	SRII 82
Total length (L)	mm	918	1 187	1 454	1 187	1 454	918	1 187	1 454
Width below (B)	mm	380	380	380	500	500	500	500	500
Width above (C)	mm	195	195	195	315	315	315	315	315
Between suspension centres (D)	mm	606	875	1 142	875	1 142	606	875	1 142
Between suspension centres (E)	mm	220	220	220	340	340	340	340	340
Height	mm	207	207	207	207	207	207	207	207
Mass	kg	16	20	23	27	32	23	27	32

For more information on the **encased SRII radiant plaque heater**, scan this QR code with your smartphone or see our Internet site

ENCASED SRII / SRII "PLACE OF WORSHIP" RADIANT PLAQUE HEATERS

SOLUTION PARTICULARLY SUITED TO HEATING "PLACES OF WORSHIP"

Technical specifications and dimensions identical to encased radiant plaque heaters SRII/SRII

OVERALL OR PARTIAL HEATING ACCORDING TO OCCUPIED AREAS

S I L E N T R U N N I N G

25% energy savings compared with Hot Air solutions

S I M P L E T O U S E

VERY FAST WARM UP (LESS THAN 2 MINUTES)

The encased version fits in perfectly with its surroundings

CLASS 4* NOx CLASS 4

MADE IN FRANCE FABRICATION FRANÇAISE

*Class 4 : < 100 mg/kWh

"This was the first time I had tried this equipment which was installed in the Sancoins church. The advice I was given, the complete study of the project and support while it was completed were key factors in my choice of Solaronics equipment. The good quality / price ratio was a further advantage but this was not the most important criterion. The products are well designed. The customer's demands were perfectly met both in heating quality and in the custom control of the functioning requested by the user. Everything has been working well since it was first used."

David GUERUT, Plumbing contractor

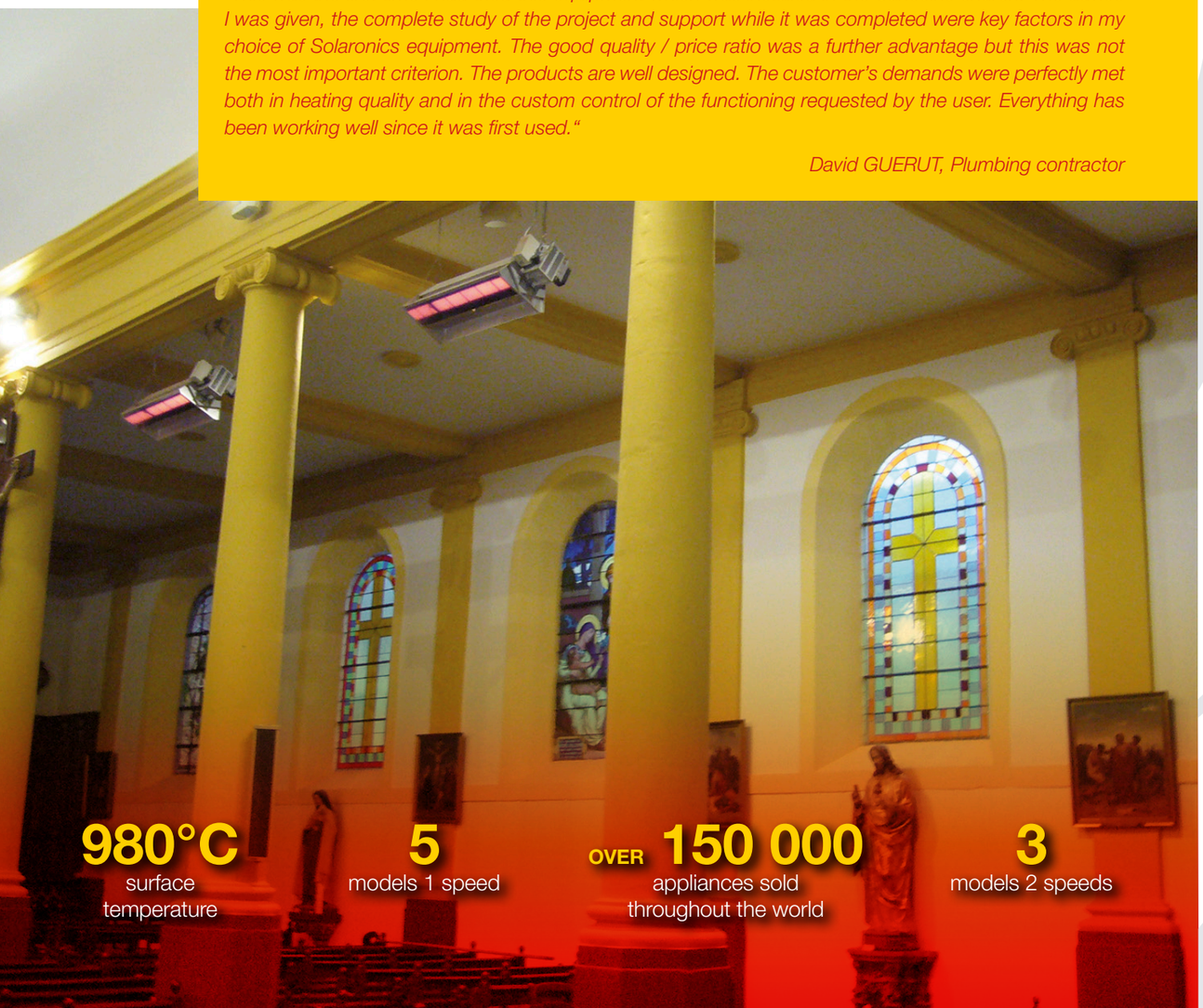

REFERENCES

Locminé church | Pont de l'Arche church | Vouillé church | Lardy church | Ploemeur church | Église d'Halluin church | Cysoing church | Bislée church | Montmagny church | Xermamenil church

High and low ventilation is obligatory to provide the air renewal that is essential in this type of establishment open to the public (Regulations CH 53, GZ 21, art. 64.1 of the RSD / Department Health Regulations)

New air dimensioning rules:

- 10 m^3/h per kW LHV (Lower heating value) installed
- add 18 m^3/h per person in establishments open to the public

To improve safety when using radiant gas panels in places of worship, we recommend the use of the following accessories:

- **Mechanical ventilation box**
  - 4 models from 1 300 m³/h to 4 000 m³/h
  - 230 Volt power supply (two-speed motor)
  - Accessories available:
    - Proximity terminal block
    - Low/high speed switch
    - Wall bracket
    - Flexible connection
    - Meshed lid
    - Meshed cowl
    - Plenum chamber
    - Exterior grille

- **Regulation box**
  - Control of 20 SRII 2 speed or 40 SRII 1 speed
  - Included: black globe probe and temperature regulator

- **Carbon monoxide (CO) detector**
  - Complies with standard EN 50291
  - 230 Volt power supply without batteries
  - Dry contact output
  - Audible signal 85dB$_A$ at 1 metre
  - Extraction chambers servo-controlled
  - Wall mounting
  - Connected to Solaronics regulation box

Correct functioning of detector to be checked at least once per year

For more information on the **“place of worship” SRII radiant plaque heaters,** scan this QR code with your smartphone or see our Internet site

SOLARHP HIGH PERFORMANCE GAS FIRED RADIANT TUBE

SOLUTION PARTICULARLY SUITED TO HEATING BUILDINGS:

- industrial
- tertiary
- of large volume
- poorly insulated
- with high air renewal rate

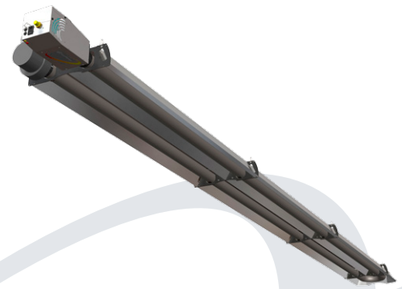

Technical data can be consulted on **www.edibatec.com**

"After giving much thought to the pros and cons of the various common heating systems, we opted for a heating system with gas fired radiant tubes. With no air movement, this system does not interfere with welding operations on shop floors. In addition, the ability very easily to adjust the heating in distinct areas, combined with local day/night temperature heating was an additional advantage for us. The installation was trouble-free and put into operation within the agreed time and budget! We are very satisfied with the installation. With fuel savings coupled with low annual maintenance costs we were able to recuperate costs in less than 3 years."

Wim Van de Velde, STORK Maintenance and Technical Manager

550°C surface temperature

93% combustion efficiency

68% radiant efficiency

1 or 2 speeds

NEW PERFORMANCE STANDARD (68% RADIANT EFFICIENCY)

Complies with the Eco Design directive (Energy Related Products)

Aesthetic SILENT RUNNING

EASY TO ASSEMBLE / FIT

Heat input reduced by 23%

Lower temperature in the chimney

New increased safety flame monitoring box

Gas consumption savings compared with a standard appliance, greater than 15% (up to 30% on renovation)

**Class 3: < 150 mg/kWh*

7 "U" tubes models from 10.5 to 48 kW, 1 or 2 speeds

3 "linear" tube models from 20 to 48 kW, 1 or 2 speeds

Available for natural gas or propane gas G31

Double gas solenoid

Annealed high emissivity aluminised steel emission tubes

Cast iron burner supports and extractor supports

End caps

High reflectivity aluminised steel reflectors

Optimised reflector geometry

Options available: 2 speeds, run return

APPLICATIONS

Industrial buildings | Production shop floors | Car garages | Sports/leisure centres | Exhibition halls and arenas | Storage depots

REFERENCES

Agrati | BMW | Boa Flex | French blood agency | Irisbus | Kiloutou | Knauf | La Poste | Mercedes | Nissan | Peugeot | Renault Trucks | Renault | Saint Gobain | Saverglass | SNCF | Speedy | Stork | Toyota

MAIN COMPONENTS

1 Emission tubes
2 Reflector modules
3 Extractor
4 Burner chamber
5 Elbow joint module

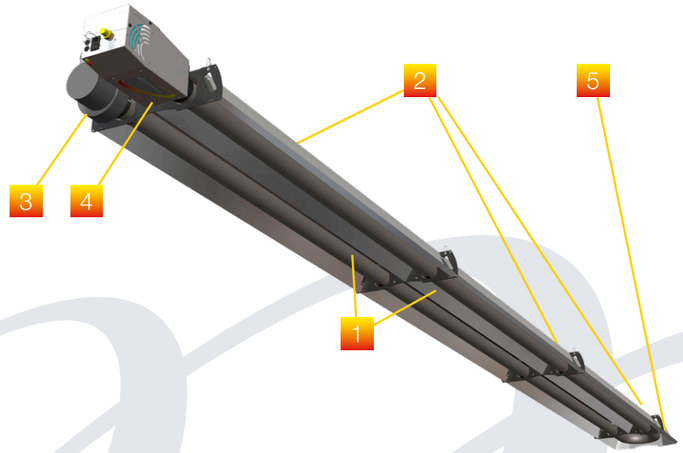

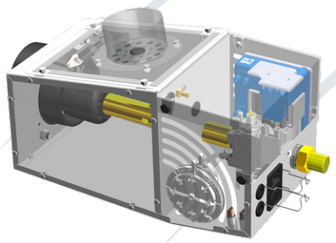

Burner

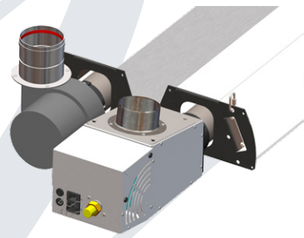

Burner/extractor set

Reflector module
(1 to 3 according to model)

EXTRACTION CONNECTION

Type B22 connection

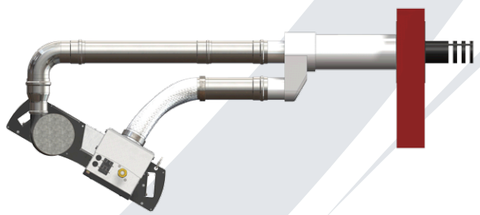

Type C12 connection

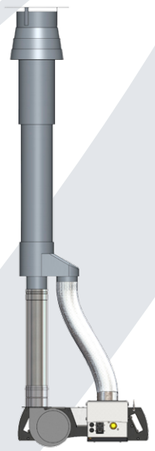

Type C32 connection

TECHNICAL CHARACTERISTICS

		SolarHP 12	SolarHP 17	SolarHP 23	SolarHP 23 L	SolarHP 32	SolarHP 36	SolarHP 36 L	SolarHP 43	SolarHP 50	SolarHP 50 L
Heat input 2nd speed	kW	10.5	15	20	20	27	32	32	40	48	48
Heat input 1st speed*	kW	8	11.5	15.5	15.5	21.5	25.5	25.5	32	37	37
Combustion efficiency	%	93	93	91	90	92	91	90	92	90	91
Radiant efficiency	%	57	66	65	65	68	67	65	65	67	65
G20 gas flow rate	m³/h	1.11	1.59	2.12	2.12	2.86	3.39	3.39	4.23	5.08	5.08
G25 gas flow rate	m³/h	1.29	1.85	2.46	2.46	3.32	3.94	3.94	4.92	5.91	5.91
G31 gas flow rate	m³/h	0.82	1.17	1.56	1.56	2.10	2.50	2.50	3.10	3.80	3.80
Gas connection		1/2" - Gas pitch male cylindrical									
Flue gas evacuation/air suction	mm	80				100					
Electrical supply		1 x 230 V + N - 50 Hz									
Electrical consumption	A	0.25	0.25	0.25	0.25	0.5	0.5	0.5	1	1	1

** 2 speed appliance option*

DIMENSIONS

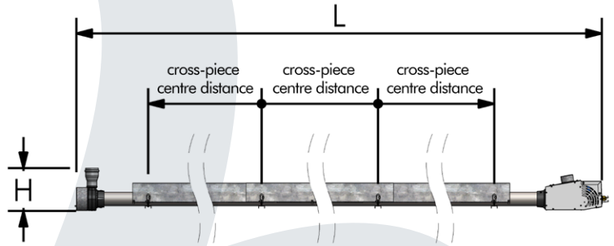

		SolarHP 12	SolarHP 17	SolarHP 23	SolarHP 23 L	SolarHP 32	SolarHP 36	SolarHP 36 L	SolarHP 43	SolarHP 50	SolarHP 50 L
Length	mm	3 209	5 409	5 409	9 557	7 609	7 609	13 999	9 398	9 398	18 272
Width	mm	604	604	604	438	604	604	438	650	650	438
Height	mm	278	278	278	276	284	284	284	366	366	366
Suspension centre distance	mm	470	470	470	416	470	470	416	622	622	416
Cross-piece centre distance	mm	2 200	2 200 (x2)		2 800 (x3)	2 200 (x3)		2 400 (x5)	2 175 + 2 220 (x3)		2 400 (x7)
Number of suspension points		4	6	6	8	8	8	12	10	10	16
Mass	kg	45	70	70	65	100	100	95	140	140	140

For more information on the **High Performance SolarHP gas fired radiant tube,** scan this QR code with your smartphone or see our Internet site

SOLARHP[R] HIGH EFFICIENCY GAS FIRED RADIANT TUBE

"PREMIUM" SOLUTION FOR HEATING BUILDINGS:

- industrial
- tertiary
- of large volume
- poorly insulated
- with high air renewal rate

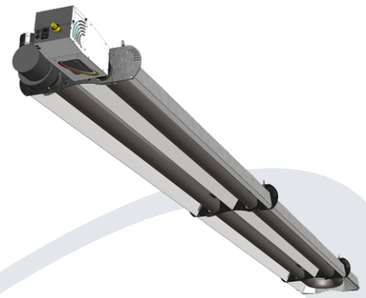

RADIANT 78% EFFICIENCY

ErP ready

Technical data can be consulted on **www.edibatec.com**

MAIN COMPONENTS

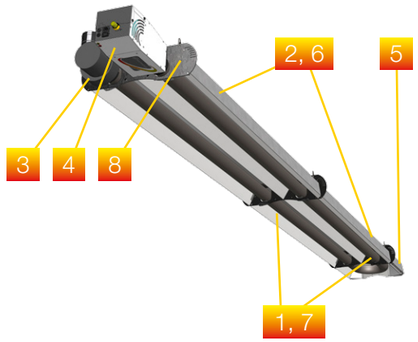

1. Emission tubes
2. Reflector modules
3. Extractor
4. Burner chamber
5. Elbow joint module
6. High density insulators and metal casing
7. Turbulators
8. End plate

CLASS 3* NOx CLASS 3

MADE IN FRANCE FABRICATION FRANÇAISE

Class 3 : < 150 mg/kWh

TECHNICAL CHARACTERISTICS

		SolarHP[R] 12	SolarHP[R] 23	SolarHP[R] 36
Heat input 2nd speed	kW	10.5	20	32
Heat input 1st speed	kW	8	15.5	25.5
Combustion efficiency	%	95	94	94
Radiant efficiency	%	74	76	78
G20 gas flow rate	m^3/h	1.11	2.12	3.39
G25 gas flow rate	m^3/h	1.29	2.46	3.94
G31 gas flow rate	m^3/h	0.82	1.56	2.5
Gas connection		1/2" - Gas pitch male cylindrical		
Flue gas evacuation/air suction	mm	100		
Electrical supply		1 x 230 V + N - 50 Hz		
Electrical consumption	A	0.25	0.6	1

DIMENSIONS

		SolarHP[R] 12	SolarHP[R] 23	SolarHP[R] 36
Length	mm	3 211	5 411	7 611
Width	mm	677	677	677
Height	mm	278	284	366
Suspension centre distance	mm	470	470	470
Cross-piece centre distance	mm	2 200	2 200 (x2)	2 200 (x3)
Number of suspension points		4	6	8
Mass	kg	65	105	155

For more information on the **High Efficiency SolarHP[R] gas fired radiant tube,** scan this QR code with your smartphone or see our Internet site

SOLARHP^{RC} CONDENSING HIGH EFFICIENCY GAS FIRED RADIANT TUBE

"BEST IN CLASS" SOLUTION FOR HEATING BUILDINGS:

- industrial
- tertiary
- of large volume
- poorly insulated
- with high air renewal rate

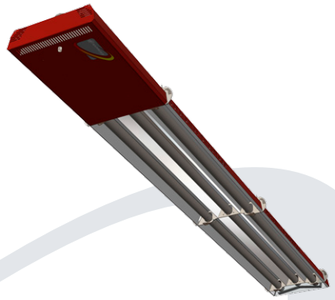

RADIANT 84% EFFICIENCY

ErP ready

Technical data can be consulted on **www.edibatec.com**

MAIN COMPONENTS

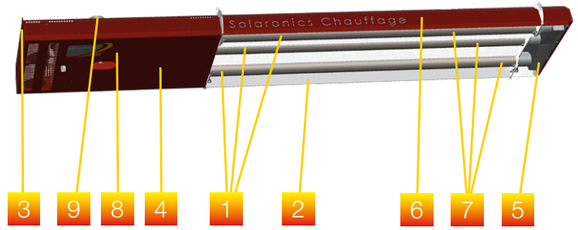

1. Emission tubes
2. High efficiency reflector modules
3. Extractor
4. Burner chamber
5. Smoke box
6. Insulators and coverings
7. Turbulators
8. Integrated condensers
9. HDPP venting

CLASS 3* NOx CLASS 3

MADE IN FRANCE FABRICATION FRANÇAISE

Class 3 : < 150 mg/kWh

TECHNICAL CHARACTERISTICS

		SolarHP^{RC} 12	SolarHP^{RC} 23	SolarHP^{RC} 36
Heat input 2nd speed	kW	10.5	20	32
Heat input 1st speed	kW	8	15.5	25.5
Combustion efficiency	%	103	99	100
Radiant efficiency	%	80	82	84
G20 gas flow rate	m^3/h	1.11	2.12	3.39
G25 gas flow rate	m^3/h	1.29	2.46	3.94
G31 gas flow rate	m^3/h	0.82	1.56	2.5
Gas connection		1/2" - Gas pitch male cylindrical		
Flue gas evacuation/air suction	mm	100		
Electrical supply		1 x 230 V + N - 50 Hz		
Electrical consumption	A	1.5	1.5	2.1

DIMENSIONS

		SolarHP^{RC} 12	SolarHP^{RC} 23	SolarHP^{RC} 36
Length	mm	3 211	5 411	7 611
Width	mm	875	875	875
Height	mm	280	280	360
Suspension centre distance	mm	670	670	670
Cross-piece centre distance	mm	2 200	2 200 (x2)	2 200 (x3)
Number of suspension points		6	8	10
Mass	kg	135	195	245

For more information on the **Condensing High Efficiency SolarHP^{RC} gas fired radiant tube,** scan this QR code with your smartphone or see our Internet site

EUROLINE & HARMOLINE GAS FIRED CONTINUOUS RADIANT TUBE HEATING SYSTEM

"CUSTOM" HEATING SOLUTION FOR BUILDINGS:

- high
- poorly insulated
- with high air renewal rate

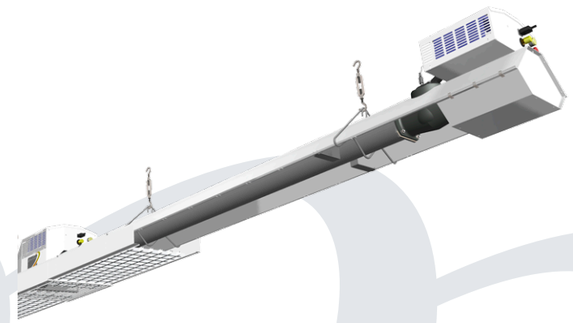

"In 1988, the sports facility in the community of Plailly was equipped with an array of continuous radiant tube heating system by Solaronics / Triatherm. We have been satisfied with the performances of the system for several years now and are delighted at how long it is lasting (installation maintenance is carried out by Solaronics). In 2009, with advice and Solaronics' support, we undertook renovation. The renovated system is giving complete satisfaction. We recommend this type of operation as we do Solaronics for their professionalism."

Olivier EUZET, Technical services manager – deputy mayor

500°C surface temperature

3 000 arrays installed throughout the world

95% combustion efficiency

400 W/m² power density

Configuration precisely adapted to your premises

SINGLE COMBUSTION PRODUCT EVACUATION

Perfectly even heat distribution

COMBUSTION PRODUCTS HAVE VERY LOW NO_X CONTENT

HIGH COMFORT LEVEL **Very highly reliable**

LIFETIME GREATER THAN 20 YEARS

Harmoline configuration blends in perfectly and aesthetically

95% combustion efficiency

Burner assembly mounted in series on an array of tubes with length adapted to the power to be installed

Complete burner with a unit power of 20, 30 or 40 kW

Available for natural gas or propane gas G31

Burner-tube assembly by weldable flanges

Silent air inlet at head of line

Installation up to 720 kW with single evacuation

Circulation and extraction of combustion products by single ventilator

Extractor can be placed indoors or outside (and if necessary in sound-proof box)

Flexibility: up to 3 controlled areas per heating array

APPLICATIONS

Industrial buildings | Production shop floors | Car garages | Sports/leisure centres | Exhibition halls and arenas | Storage depots

REFERENCES

Alstom | Rodez amphitheatre | MBK | Tecafiltres | CRMA | La Poste | SNECMA | Valeo | SNCF | Wabco | Bergerat Monnoyeur | Beaunes covered market

MAIN COMPONENTS

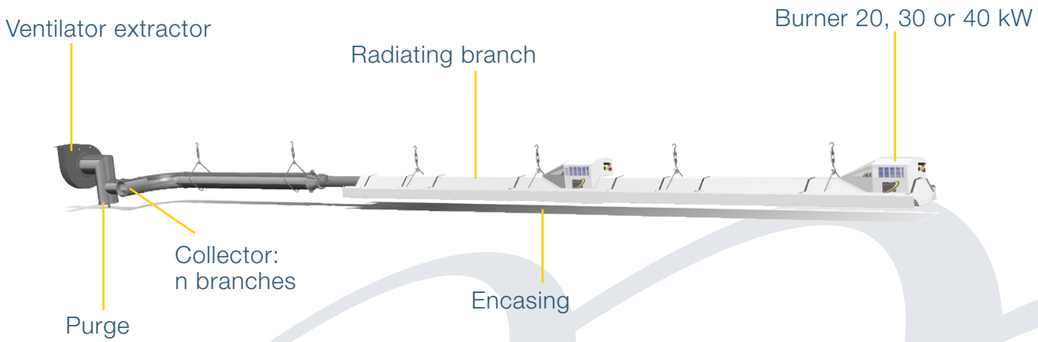

Overall view of the combustion head

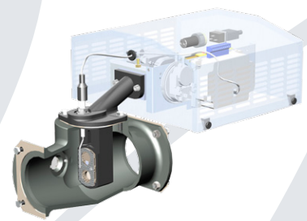

Overall view of the burner

INSTALLATION PRINCIPLE

EUROLINE

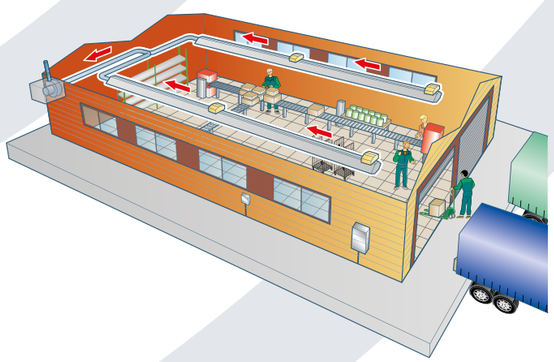

HARMOLINE (encasing optional)

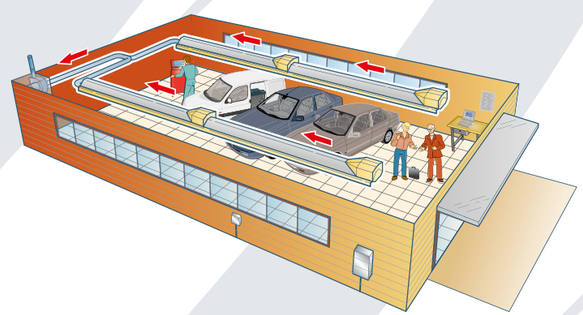

TECHNICAL CHARACTERISTICS

		BRT20	BRT30	BRT40
Heating value LHV	kW	20	30	40
G20 gas flow rate	m^3/h	2.12	3.17	4.23
G25 gas flow rate	m^3/h	2.46	3.69	4.92
G31 gas flow rate	kg/h	1.56	2.34	3.12
Minimum distance between burners	m	5	7	10
Maximum distance between burners	m	10	15	20
Recommended minimum height	m	3.5	4.5	5
Recommended maximum height	m	6	8	12
Array mass	kg/m	13		
Electrical power supply - regulation box		1 x 230 V + N - 50 Hz		
Electrical power supply - extractor box		3 x 400 V + N - 50 Hz		
Electrical power		from 1.5 kW to 4 kW according to extractor		

CONFIGURATION EXAMPLES

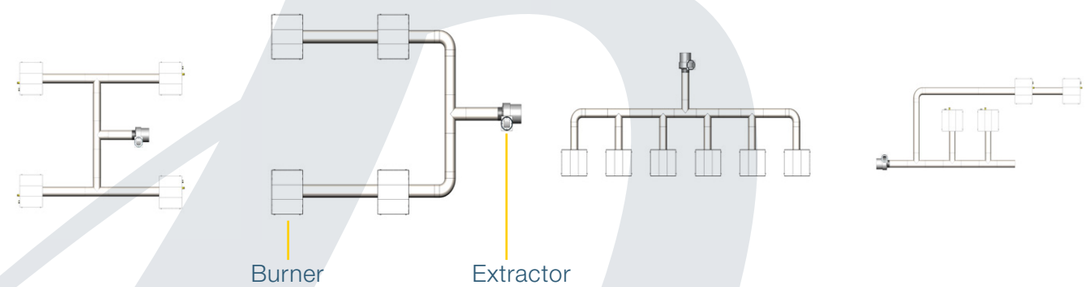

For more information on the **Euroline & Harmoline gas fired continuous radiant tube heating system,** scan this QR code with your smartphone or see our Internet site

RAYLINE GAS FIRED RADIANT STRIP

DIRECT DECENTRALISED CUSTOM HEATING SYSTEM FOR BUILDINGS:

- with a minimum height of 4 metres
- well insulated
- with difficult access and circulation

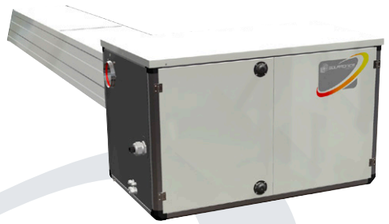

High combustion efficiency **FLEXIBILITY**

LOW OPERATING COSTS **Lightweight**

Easy maintenance NO PAINT

Safety (no gas inside the building) **RELIABLE**

AESTHETIC MODULAR

COMFORTABLE (EVEN RADIATION DISTRIBUTION)

SILENT RUNNING **Very low temperature gradient**

Lower investment than for radiant hot water panels

"This new natural gas heating system is giving us entire satisfaction. It provides an agreeable warmth, gives out a radiation that is gentle and diffuse but that is effective and can be felt. The system quickly and evenly provides the desired 18°C throughout the building. Very quiet, the technique eliminates air movements, nests of ceiling ducts and floor mounted equipment found on other shop floors. The particularly high efficiency of the system gives energy savings and enables running costs to be controlled. "

Philippe Nicolau, Production Manager at SEPV

8 models from 61 to 330 kW (from model RSB 110: 2 standard speeds, modulating on option, propane gas on option)

Burner can be installed indoors, outside on gable, on roof

Modular construction system enabling all geometrical configurations (45° and 90° elbows, direction change, Tee, mono-tube, dual tube, etc.)

Encasing panels for combustion unit in steel coated with "sea coast compatible" polyester paint

Combustion chamber **guaranteed 5 years**

Lateral evacuation connection (improved sealing – no condensate return)

Quick connection of all tubes by "Metu®" flanges allowing later modifications to the array (tertiary version)

Trapezoidal cross section of emission modules maximises the direct radiated flow (tertiary version)

Spiral radiant tubes in annealed aluminised steel, high emissivity, no paint (Lindab jointing technology)

APPLICATIONS

Industrial buildings | Production shop floors | Car garages | Sports/leisure centres | Shopping centres | Exhibition halls and arenas

REFERENCES

AGC | Airbus | Areva | Workshops of the city of Lille | BMW | Coca-Cola | Eurocopter | Paris Events | RATP | Renault | Renault Trucks | SNCF

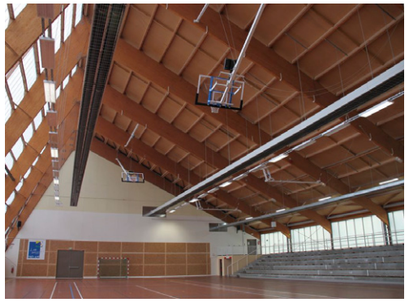

MAIN COMPONENTS

COMBUSTION UNIT

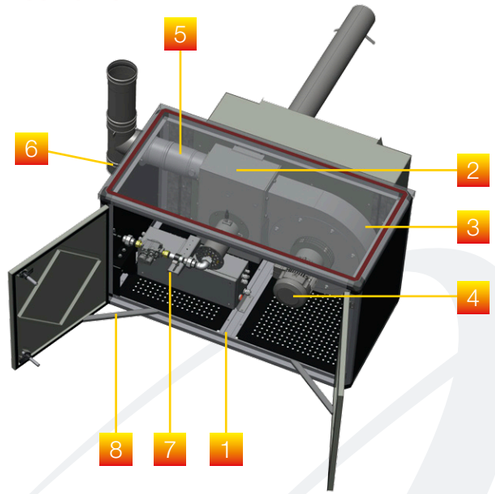

1 Modular construction on aluminium profiles
2 Combustion chamber
3 Recirculating fan
4 Three phase motor
5 Lateral venting connection
6 Removable plug
7 Control-command equipment
8 Lockable doors in the open position

EMISSION MODULES (tertiary version)

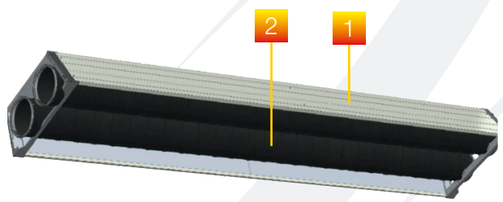

1 Trapezoidal section
2 Spiral radiant tubes

EXPANSION MODULE

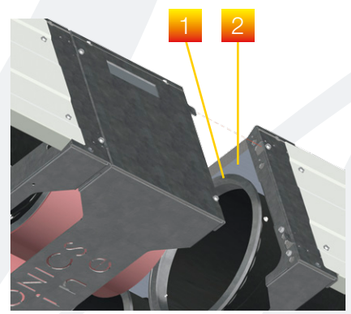

1 Quick connection of all the tubes by “Metu®” flanges (tertiary version)
2 High density thermal insulation

INSTALLATION PRINCIPLE

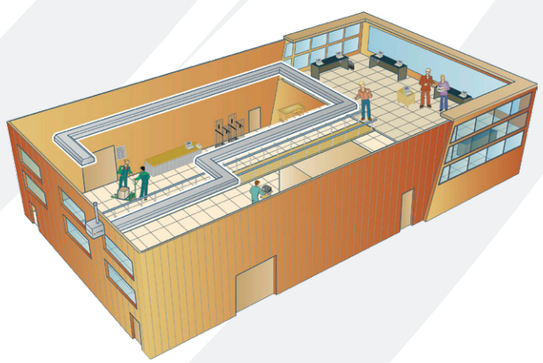

TECHNICAL CHARACTERISTICS

		RSB 65	RSB 75	RSB 110	RSB 130	RSB 165	RSB 200	RSB 220	RSB 330
Heating value HHV	KW	61	75	61 - 106	78 - 134	100 - 162	126 - 192	132 - 220	198 - 330
Heating value LHV	KW	55	65	55 - 95	70 - 120	90 - 145	115 - 175	120 - 200	180 - 300
Combustion efficiency	%	92		92			92		92
G20 gas flow rate	m³/h	5.8	6.9	10.1	12.7	15.3	18.5	21.2	31.8
Gas connection		3/4”		1”			1”		1”1/4
Electrical supply		3 X 400 V + N - 50 HZ							
Nominal current	A	1.7		3.2			4.6		
Type of venting		B22							
Venting diameter	mm	130							

After a detailed study of your premises and requirements by our technical department we will be able to optimise the configuration and offer you the best solution

DIMENSIONS

		RSB 65	RSB 75	RSB 110	RSB 130	RSB 165	RSB 200	RSB 220	RSB 330
Width	mm	1 255		1 255			1 255		1 400
Width (overall)	mm	1 424		1 424			1 424		1 484
Height	mm	727		772			772		740
Box depth	mm	645		745			745		730
Depth (overall)	mm	1 074		1 174			1 174		1 130
Total mass	kg	116		119			134		156

DUAL TUBE / MONO-TUBE EMISSION MODULES

		RSB 65	RSB 75	RSB 110	RSB 130	RSB 165	RSB 200	RSB 220	RSB 330
Tube diameter	mm	250							315
Standard length	m	2 / 4							
Height	mm	334							354
Dual tube / Mono-tube width	mm	772 / 452							850 / 535
Linear mass Dual tubes / Mono-tube	kg/m	17 / 11							20 / 13
Minimum strip length Dual tubes / Mono-tube	m	50 / 90	50 / 90	50 / 90	70 / 130	70 / 130	90 / 170	90 / 170	90 / 170
Maximum strip length Dual tubes / Mono-tube	m	80 / 150	80 / 150	80 / 150	100 / 190	100 / 180	130 / 250	130 / 250	160 / 310

For more information on the **RayLine gas fired radiant strip,** scan this QR code with your smartphone or see our Internet site

PEC RADIANT HOT WATER PANEL

SUSPENDED HEATING SOLUTION WITH HEAT TRANSFER FLUID FOR BUILDINGS:

- of large volume
- with intermittent heating
- with point heating

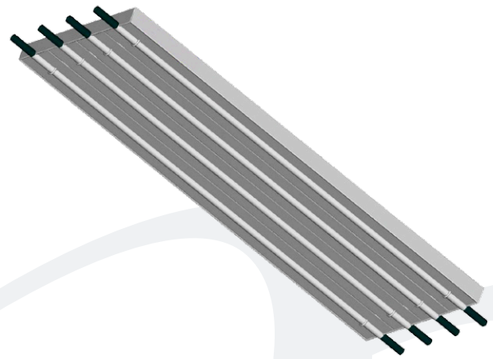

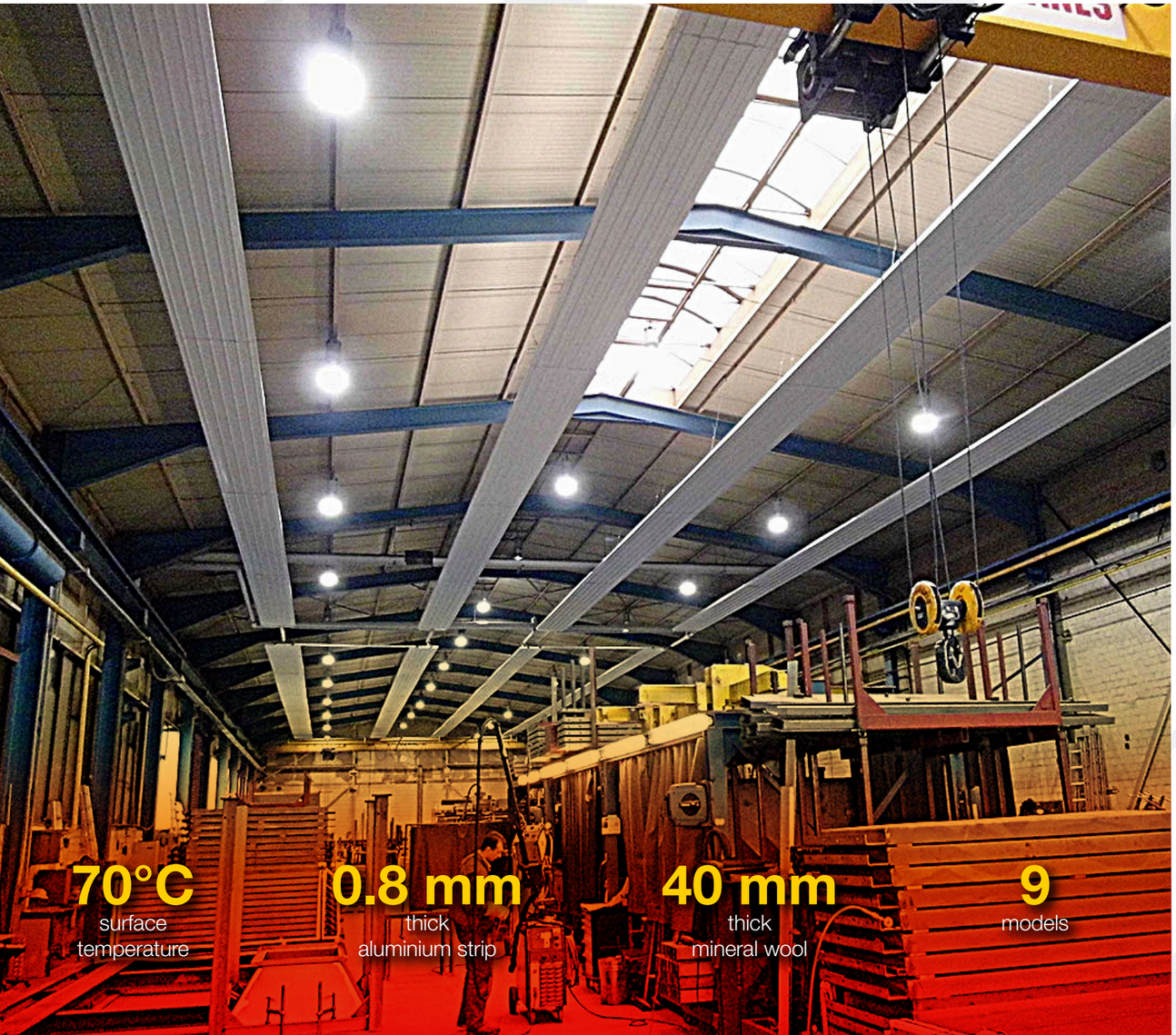

ABSOLUTELY SILENT RUNNING (NO MOVING MECHANICAL PARTS)

NO MAINTENANCE AT HEIGHT

Safety (no gas / electricity supply)

COMFORT (NO AIR DISPLACEMENT)

Long-lasting installation

LOW WEIGHT WITH ALUMINIUM

Warranty 10 years Warranty

Radiant strip in aluminium thickness 0.8 mm, width 150 mm

40 mm aluminium coated mineral wool insulation (density 45 kg/m^3)

Steel tube diameter 28 x 1.5

Standard lengths 2, 3, 4 and 6 m / Standard widths from 300 to 1 500 mm

Type M or V crimped connectors diameter 28

RAL 9016 (other RAL available on request)

Option available: intermediate strip with lighting (LED panel or fluorescent tubes)

APPLICATIONS

Storage depots | Logistics platforms | Aeronautical hangars | Shopping centres | Industrial buildings | Sports/leisure centres

REFERENCES

Ford | Siemens | Skoda | TMS | Volkswagen | Ziegler

SIZE AND INTEFACE DIMENSIONS

Length 2 m :

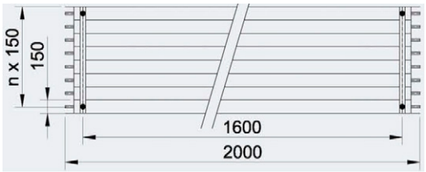

Length 4 m :

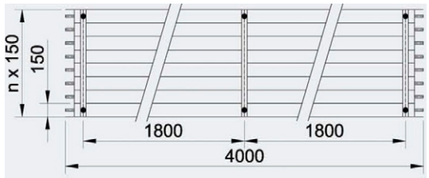

Length 3 m :

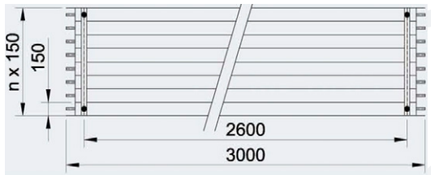

Length 6 m :

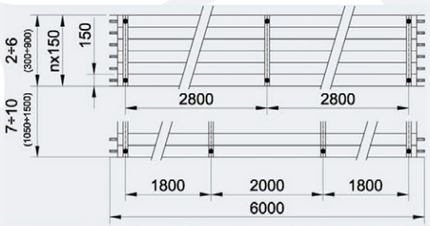

INSTALLATION

After a detailed study of your premises and requirements by our technical department we will be able to optimise the panel configuration and offer you an economical solution. Radiant hot water panels are delivered on **6 m long pallets,** wedged with wooden laths then wrapped in heat shrunk film.

Contents of the delivery for a project:

- Panels with supply and distribution collector if necessary
- Panels without collector
- Panels with distribution collector
- Cover kits for connections between panels, containing:
  - 1 lower cover plate
  - 1 tube support
  - 1 insulating panel for connections
  - white tinted rivets 3 x 8
  - 2 side cover plates

Optional accessories:

- Collector masking kits containing:
  - 1 masking plate
  - 1 or more collector connection feet
  - rivets 3 x 8
- Factory-fitted bullet-proof grilles
- Black globe temperature probe

TECHNICAL CHARACTERISTICS

Width (mm)		300	450	600	750	900	1 050	1 200	1 350	1 500
Number of tubes		2	3	4	5	6	7	8	9	10
Type of tubes		28 x 1.5 mm, steel								
Panel		Aluminium RAL 9016								
Pitch between tubes		150 mm								
Heating power according to NF EN 14037 (W/m)	ΔT* 20 K	55	78	100	123	146	168	191	211	231
	ΔT 25 K	72	102	131	161	191	220	250	275	301
	ΔT 30 K	90	127	164	201	237	274	311	343	374
	ΔT 35 K	108	152	197	241	286	330	375	412	450
	ΔT 40 K	127	179	231	283	336	388	440	484	528
	ΔT 45 K	146	206	266	327	387	447	507	557	607
	ΔT 50 K	165	234	302	371	439	508	576	632	689
	ΔT 55 K	185	262	339	416	492	569	646	709	772
	ΔT 60 K	205	291	376	461	547	632	717	787	857
	ΔT 65 K	226	320	414	508	602	696	790	866	942
	ΔT 70 K	247	350	453	555	658	761	864	947	1 030
	ΔT 75 K	268	380	492	603	715	827	939	1 029	1 118
	ΔT 80 K	289	410	531	652	773	894	1 015	1 111	1 208
	ΔT 85 K	311	441	571	701	831	962	1 091	1 195	1 298

ΔT = (T outlet water + T return water) / 2 – T ambient

DIMENSIONS

Width (mm)		300	450	600	750	900	1 050	1 200	1 350	1 500
Length 2 m	Mass in operation (kg)	11.2	16.1	20.9	25.8	30.7	35.5	40.4	45.3	50.2
	Fastening points	4	4	4	4	4	4	4	4	4
	Between centres (mm)	1 600	1 600	1 600	1 600	1 600	1 600	1 600	1 600	1 600
Length 3 m	Mass in operation (kg)	16.5	23.7	31	38.3	45.6	52.8	60	67.3	74.6
	Fastening points	4	4	4	4	4	4	4	4	4
	Between centres (mm)	2 600	2 600	2 600	2 600	2 600	2 600	2 600	2 600	2 600
Length 4 m	Mass in operation (kg)	22.4	32.4	42.3	52.1	61.7	71.9	81.8	91.7	101.6
	Fastening points	6	6	6	6	6	6	6	6	6
	Between centres (mm)	1 800	1 800	1 800	1 800	1 800	1 800	1 800	1 800	1 800
Length 6 m	Mass in operation (kg)	33	47.6	62.4	77	91.8	106.6	121.3	136.1	150.9
	Fastening points	6	6	6	6	6	8	8	8	8
	Between centres (mm)	2 800	2 800	2 800	2 800	2 800	1 800 2 000 1 800	1 800 2 000 1 800	1 800 2 000 1 800	1 800 2 000 1 800

For more information on the **Radiant hot water panel PEC,** scan this QR code with your smartphone or see our Internet site

CHIMNEYS FOR GAS-FIRED RADIANT TUBES

Our flue kits have been developed with our partner Muelink&Grol. Muelink&Grol is the European leader in the manufacture of evacuation systems for gas appliances, whether in aluminium, stainless steel or polypropylene.

Our flue systems ensure compatibility with regulations. Simple and comprehensive documentation for preparing the installation site.

TYPE A2 CONNECTION

Combustion air suction and flue gas evacuation inside the building

Rain cap

Compatible with all models except SolarHP^{R} and SolarHP^{RC}

TYPE B CONNECTION

Combustion air suction inside the building and flue gas evacuation outside the building

Chimney kit B22 – SolarHP

Kit contents:

1 Rain cap
2 Length 1 m

SolarHP 12/17/23: flue pipe diameter 80 mm
SolarHP 32/36/43/50: flue pipe diameter 100 mm

Chimney kit B22 – SolarHP^{R}

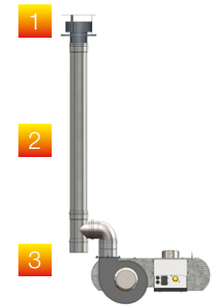

1 Rain cap
2 Length 1 m (low temperature flue pipe diameter 100 mm)
3 Elbow 90° + T90° with plug

Chimney kit B22 – SolarHP^{RC}

1 Roof terminal
2 Length 0.5 m (polypropylene flue pipe diameter 100 mm)
3 Tee 90° with collector
4 Condensate evacuation siphon

TYPE C CONNECTION

Combustion air suction and flue gas evacuation outside the building

C12 balanced flue kit (wall balanced flue) – SolarHP

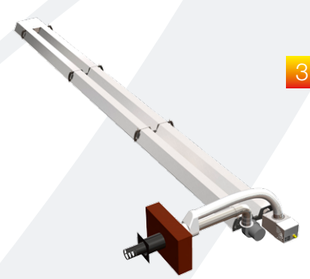

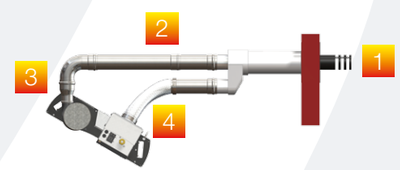

1 Wall terminal
2 Lengths 0.5 m + 2 x 0.25 m (only models 12/17/23)
3 Elbow 90°
4 Flexible tube + 2 collars (suction)

SolarHP 12/17/23: flue pipe diameter 80 mm
SolarHP 32/36/43/50: flue pipe diameter 100 mm

C12 balanced flue kit (wall balanced flue) – SolarHP^{R}

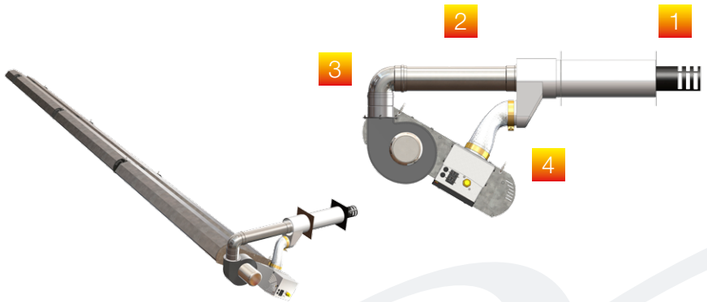

1. Wall terminal
2. Length 0.5 m (low temperature flue pipe diameter 100 mm)
3. Elbow 90°
4. Flexible tube + 2 collars (suction)

C12 balanced flue kit (wall balanced flue) – SolarHP^{RC}

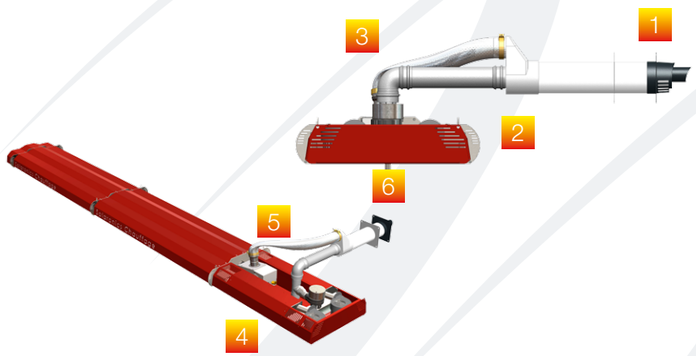

1. Wall terminal
2. Length 0.5 m (polypropylene flue pipe diameter 100 mm)
3. Elbow 90°
4. Tee 90° with purge
5. Flexible tube + 2 collars (suction)
6. Condensate evacuation siphon

C32 balanced flue kit (roof balanced flue) – SolarHP

1. Roof terminal
2. Length 0.5 m
3. Flexible tube + 2 collars (suction)

SolarHP 12/17/23:
flue pipe diameter 80 mm

SolarHP 32/36/43/50:
flue pipe diameter 100 mm

C32 balanced flue kit (roof balanced flue) – SolarHP^{R}

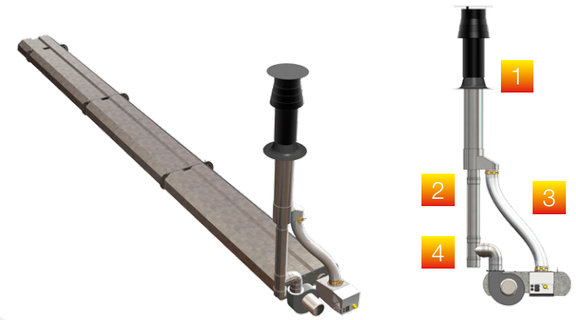

1. Roof terminal
2. Length 0.5 m (low temperature flue pipe diameter 100 mm)
3. Flexible tube + 2 collars (suction)
4. Elbow 90° + T90° with plug

C32 balanced flue kit (roof balanced flue) – SolarHP^{RC}

1. Roof terminal
2. Length 0.5 m (polypropylene flue pipe diameter 100 mm)
3. Tee 90° with purge
4. Flexible tube + 2 collars (suction)
5. Condensate evacuation siphon

ACCESSORIES

Mono tube flue pipes available in:

- Length 0.25, 0.5 and 1 metre
- Diameter 80 mm, 100 mm
- Low temperature
- Polypropylene

Elbows* available in:

- 45° and 90°
- Diameter 80 mm, 100 mm
- Low temperature
- Polypropylene

*Equivalent elbow lengths:
1 elbow 90° = 1 m
1 elbow 45° = 0.5 m

REGULATION FOR RADIANT APPLIANCES

We offer a wide choice of regulation solutions specifically adapted to our range of radiant heaters.

We offer solutions from “basic” to “premium”.

PUSH BUTTON TIMER BPT

- Basic solution for all radiant appliances
- 1 zone
- Time-lag adjustable from 30 minutes to 10 hours
- Can be used with Thermostats TSR and Boxes R11, R11H, R21, R21H, R21P, R21HP
- Waterproof plastic case
- Surface mounting on wall

THERMOSTAT WITH INTEGRATED RESULTANT PROBE TSR

- Regulation solution for 1 speed radiant appliances
- 1 zone
- A single set level
- No clock
- Up to 4 radiant appliances per thermostat
- Surface mounting on wall
- IP30

1 Temperature setting

2 Integrated resultant probes

TOUCHSCREEN MULTI-SETTING THERMOSTAT WITH CLOCK TM2 EVO

- Touchscreen regulation solution for 1 speed radiant appliances
- 1 zone
- 4 setting levels per day
- Weekly programming
- Frost protection setting
- Smart controller (optimum starting)
- Lockable screen
- Metal case
- Power 230 Volts (no batteries)
- Maximum admissible electrical power 2 300 VA
- Delivered with black globe probe CTN 10k (remote)

MULTI-SETTING THERMOSTAT WITH CLOCK TM2 EVO 2 SPEED

- Regulation solution for 2 speed radiant appliances
- 1 zone
- 2 setting levels per day
- Weekly programming
- Metal case
- Power 230 Volts (no batteries)
- Maximum admissible electrical power 1 300 VA
- Delivered with black globe probe CTN 1k (remote)

PROTECTION AND REGULATION BOX

- Regulation and electrical protection solution for 1 and 2 speed radiant appliances
- From 1 to 4 zones
- With or without clock
- 2 setting levels for boxes with clock
- Weekly programming
- Maximum admissible electrical power 1 300 VA per zone
- IP55
- Delivered with one black globe probe CTN 1k per zone

Black globe temperature probe

COMMUNICATING BOX

Solaronics has developed a range of standard communicating boxes for 2 or 3 zones to meet requirements for the control, management and maintenance of heating installations.

- Control by communicating PLC
- 1 and 2 speed radiant appliances
- 2 zone or 3 zones
- 2 setting levels per day, weekly programming
- Frost protection setting
- Electrical protection of radiant panels and tubes
- 1st and 2nd speed running time
- Modbus open communication table
- Maximum admissible electrical power 1 300 VA per zone
- IP55
- Delivered with one black globe probe CTN 10k per zone

Solaronics communicating boxes are easy to interface via a Modbus RS 485 - Ethernet (TCP/IP) network or with a BMS/CTM

WE OFFER THE FOLLOWING COMMUNICATION CARDS:

- RS485 Modbus card: Modbus RS485 network
- pCOWeb Control card: Ethernet (TCP/IP), Modbus TCP/IP networks

For better control and reduction of your energy consumption, we offer the following functionalities on option:

- **Pushbutton for timed forcing to “busy” setting**
- **Automatic detection of door opening:**
  heating stopped after set time (door contacts not supplied)
- **Gas metering:**
  counts the pulses from the gas meter
- **Gas consumption estimate:**
  estimates consumption based on appliance running time
- **Estimate of Unified Degree Days:**
  with an exterior temperature probe included

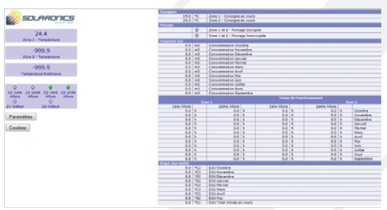

pCOWeb interface

BMS/CTM communication

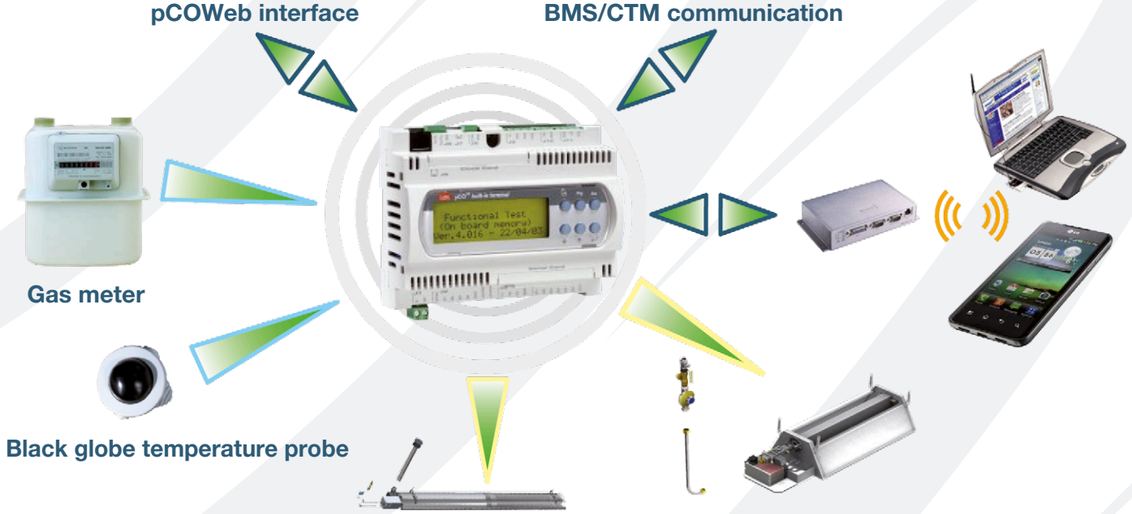

THE PCOWEB CONTROL INTERFACE ENABLES

- PLC hosting of web pages consultable via a browser
(Internet Explorer, Mozilla Firefox, Google Chrome or Smartphone)
- All regulation parameters can be read and modified
- Temperature curves can be plotted and exported to a spreadsheet

To optimise your installation and prevent any consumption excesses, we offer a **monthly surveillance / monitoring reporting contract** including updates