MINIGAZ Eco
GAS AIR HEATERS

MH 16/21/28/35/50/60/80 Eco
MC 21/28/35/50/60/80 Eco
MV 35/50/60/80 Eco

Axial or centrifugal fan
Flue type : room air dependent / independent
Regulation and control by pilot wire
Electronic ignition and flame control by ionization
Multi-torch burner
Furnace guaranteed 5 years

SOLARONICS Chauffage

178 rue du Kemmel - B.P. 129 - 59428 ARMENTIERES CEDEX FRANCE - Tel: +33.3.20.10.59.59 - Fax: +33.3.20.35.57.22

INSTRUCTIONS— GAS AIR HEATER - MINIGAZ Eco MH Eco, MC Eco, MV Eco – NT09004I– GB

CONTENTS

N° de chapitre	Chapitres	Pages
1	**GENERAL RECOMMENDATIONS**	3
1-1	Devices description - Operation	3
1-2	Use instructions	3
1-3	Operation	3
1-4	Safety	4
1-5	Switch-off	4
1-6	Warranty	4
2	**TECHNICAL FEATURES OF SUSPENDED GAS AIR HEATERS Minigaz Eco**	5
2-1	Technical features of axial suspended gas air heaters MH Eco	5
2-2	Technical features of vertical suspended gas air heaters MV Eco	6
2-3	Technical features of centrifugal suspended gas air heaters MC Eco	8
	Fan box assembly for MC Eco models	8
3	**GAS AIR HEATERS INSTALLATION**	10
3-1	Advice for installation	10
3-2	List of standard supports	10
3-3	SMR rotating brackets for MH16 Eco to MH50 Eco type	11
3-4	SMF fixed wall brackets for MH16 Eco to MH50 Eco type	12
3-5	SMF fixed wall brackets for MH60 Eco and MH80 Eco type	13
3-6	SMF fixed wall brackets for MC21 Eco to MC60 Eco type	13
4	**WIRING DIAGRAMS**	14
4-1	Wiring diagram of centrifugal gas air heaters MC60 Eco - MC80 Eco	14
4-2	Wiring diagram of gas air heaters	15
4-3	Pilot wire concept	16
4-4	Remote faulty signal	16
4-5	Connection for standard controllers	17
5	**FLUE CONNECTIONS**	19
5-1	Généralités	19
5-2	Connection of flue pipe- B22—for MH, MC and MV Eco types	19
5-3	Connection of horizontal coaxial flue pipe – C12 — for MH and MC Eco types	20
5-4	Connection of vertical coaxial flue pipe - C32 - for MH and MC Eco types	21
5-5	Connection of vertical coaxial flue pipe - C32 - for MV Eco type	22
6	**GAS DATA**	23
6-1	Gas modification	23
6-2	Set up table for gas valve	24
7	**GAS CONNECTION**	25
7-1	Connection of gas air heaters	25
8	**COMMISSIONING OF GAS AIR HEATERS**	25
8-1	Working principle	25
8-2	Spare parts list	26
9	**MAINTENANCE**	27
10	**RECOMMENDATION FOR END USER**	27
11	**TROUBLESHOOTING**	28

WARNINGS

The range covered by these instructions have successfully undergone various tests and controls as defined by the European Gas Directive: mechanical and electrical safety, reliability, combustion hygiene...

Because of the technical requirements it notifies, the CE mark is the official recognition of this device design quality, manufacturing and performance. Its lifetime and performances will be optimum if used and maintained according to the rules and the prescriptions in force.

1-1-GENERAL RECOMMENDATIONS

These devices must only be installed in sufficiently ventilated buildings, except for devices equipped with airtight connection.
The good operation of the air heater depends upon correct installation and start up.
Any non-respect of these rules would immediately imply the manufacturer's discharge.
The installation and maintenance must be made according the regulation and good engineering practices in force, by skilled personnel.

DO NOT INSTALL ANY GAS AIR HEATER IN:

- Premises with explosion risks,
- Premises with chlorinated combinations fumes,
- Premises with high combustible dust content,
- Highly humid premises (electrical danger),
- Domestic premises.

It is of the responsibility of the installer, after having checked that the assembly respects the prescriptions of these instructions:

1°) To inform the user:

- that he cannot modify himself the devices design nor the installation implementation ; **Any modification (exchange, setting back….) of safety components or parts, that influence the device output or quality of combustion, systematically implies the EC mark withdrawal.**
- **that it is indispensable to have the recommended cleaning and maintenance operations made.** One yearly preventive maintenance operation is compulsory.

2°) To give the user these instructions:
SOLARONICS Chauffage, with the EC marking notifying organization, reserves the right to update these instructions. Only the instructions provided with the device can be considered as contractual. Do carefully keep them close to the device.

1-1 - Devices description - Operation

The Minigaz Evolution Eco suspended gas air heater is an independent warm air generator, operating with natural gas or propane ; it is conform to the European Directive 2009/142 that applies to gas devices.

It is a «direct» gas heating system ; it produces and emits heat without intermediary heat transfer fluid.
For the whole range described in these instructions, the combustion products exhaust ,outside the premises, is made by an extractor. The combustion air is sucked in the inside or outside premises. These devices can be connected with vertical or horizontal balanced-flue terminal or shaft outlet.
The Minigaz Evolution Eco suspended gas air heaters run with the various gas mentioned on their rating-plates according to the European Directive

1.2. Use instructions

- For this device operation and maintenance, please read the instructions.

- Have at least one maintenance operation per year , by skilled personnel. The maintenance operations frequency depends upon the environment where the appliance is installed. A regular inspection must be made specially in dusty premises.
- Check regularly that there is no distortion of the device, the chimney or the gas connections.
- Check regularly that the air openings of the premises and around the device are not clogged.
- Make sure that the warm air can normally circulate within the premises, and that there is no obstruction at suction (fan side) nor in front of the supply air terminal device (open grid).
- The control box should be subjected to one electrical cut per 24 hours at least

1.3. Operation

- On heat request, the burner ignites thanks to the ignition electrode. The fan starts and the warm air is blown within the premises. On reaching the set point temperature, the burner goes out. The fan goes on operating during about 1 minute, till the residual heat escapes from the heat exchanger

1.4. Safety

- Any flame failure is detected by an ionization sensor and the gas by-pass valves immediately close.

- The exchanger thermal protection is made by two thermostats. The first one, with automatic resetting, protects from insufficient air output (clogging, fan failure). The second one, with manual resetting, is set at upper threshold than the first one. It protects the device from major overheating due to malfunction or inadequate using.

In case of trouble, please contact us.

Make sure that the device can be normally fed with combustion air at atmospheric pressure (any modification of the building further to the installation must be made considering this point). Over-depression inside the premises can disturb the device operation by depriving it of necessary air for combustion.

1.5. Switch-off

- To switch off the device for a short period, just cut off the thermostatic line (put the thermostat at minimum set point or cut off the thermostat switch).

- For extended stop, cut off the thermostatic line, close the gas valve and cut off the electrical power, carefully waiting for the **fan stop**.

Gas and electricity must be cut off only in case of emergency or for extended stop periods.

1.6. Warranty (General terms of business excerpt, chapter WARRANTY):

The devices must be installed by skilled professionals, in conformity with the rules in force, the rule book and the recommendations mentioned on our assembly instructions).

SOLARONICS CHAUFFAGE offers 1 year-warranty on parts and « manufacture » manpower from the devices delivery (5 years on the exchanger).
This warranty is valid with the provision that the manufacturer recommendations mentioned in these instructions have been observed and that the warranty supplied with each device has been returned.

The warranty will come in force on the manufacturing date defined by the company and provided the attested and signed warranty has been returned. We accept no responsibility and no warranty applies in case of customer carelessness, faulty, inadequate or non conform installation. Only the manufacturing or raw materials malfunctions are concerned.

The warranty is limited to the parts replacement, when recognized as faulty, by identical parts; the cost of manpower, travelling, transportation and access to the equipment are excluded.

Any replacement made during the warranty period, even if no equipment immobilization is requested, does not extend the warranty period in any case. No damages can be claimed for direct or indirect injury.

Any installation, maintenance and trouble shooting must imperatively made by skilled professionals. Any intervention must be made according to the rule book according to the rules in force and our recommendations as per these instructions. The good operation of the device depends upon correct installation and start up. Any non observance of the rules would immediately imply our company's responsibility discharge

The devices must only be equipped with genuine vent parts and air intake.
In case of using accessories that are not recommended by our company, make sure of the compatibility. Our company is not responsible for possible damages or injury resulting from inappropriate use of the devices.

The knowledge and respect of legal rules, as well as design, installation, start up and maintenance norms are exclusively of the responsibility of the Engineering and Design office, installer and user.

Our warranty does not consider nor cover the damages due to:

- Outside phenomena,
- User negligence,
- Non respect of our technical instructions recommendations,
- Immediate or delayed damaging further to faulty handling on transportation or wrong move,
- Using other accessories than the original ones,
- Lack of maintenance or supervision.

Our company is not responsible for any physical or material injury, to the buyer or any other person, that may be caused by our products or that would directly or indirectly ensue these products use.

2- TECHNICAL FEATURES OF MINIGAZ Evolution Eco GAS AIR HEATERS

MH Eco type

The MH Eco gas air heaters are equipped with an axial fan.

That model has been designed for direct blowing and are equipped with a vertical and horizontal outlet grid.

2-1 Technical features of axial suspended gas air heaters MH Eco

TYPE			MH16 Eco	MH21 Eco	MH28 Eco	MH35 Eco	MH50 Eco	MH60 Eco	MH80 Eco
Rated heat input		kW	14,2	20	27	34	50	60	80
Rated heating capacity		kW	13,1	18,5	25	31,5	46,3	55,5	74
Efficiency		%	92,5	92,5	92,5	92,5	92,5	92,5	92,5
Minimum rated heating capacity		kW	10,5	14,8	20	25,2	37	44,4	59,2
Efficiency (min. rated heating capacity)		%	92	92	92	92	92	92	92
Speed rotation		tr/mn	1350	920	1350	1050	1350	910	900
Air flow rate at 50 °C		m^3/h	1500	1650	2300	3250	5300	6500	8800
Air DeltaT°		°C	24	24	26	26	25	25	25
Airthrow		m	12	12	16	23	28	28	28
Gas flow rate at 15°C	G20	20 mbar	1.50 m^3/ h	2.12 m^3/ h	2.86 m^3/ h	3.60 m^3/ h	5.29 m^3/ h	6.35 m^3/ h	8.47 m^3/ h
	G25	25 mbar	1.67 m^3/ h	2.35 m^3/ h	3.18 m^3/ h	4.00m^3/ h	5.88 m^3/ h	7.06 m^3/ h	9.41 m^3/ h
	G31	37 mbar	1.11 kg/h	1.56 kg/h	2.11 kg/h	2.66 kg/h	3.91 kg/h	4.69 kg/h	6.25 kg/h
Exhaust diam.		mm	80 / 125	80 / 125	80 / 125	80 / 125	130	130	130
Air inlet diam.		mm					130	130	130
Voltage			230 Volts / 50 Hz - IP42						
Electrical power		VA	290	300	310	320	500	580	750
Mass		kg	54	82	82	92	125	152	194
Sound pressure (MH Eco) - 5m in free field		dBA	42	43	47	46	56	54	53

Size features for MH Eco models

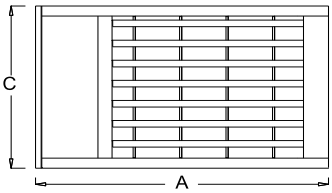

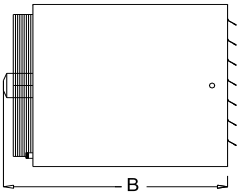

Connections for16/21/28/35 models

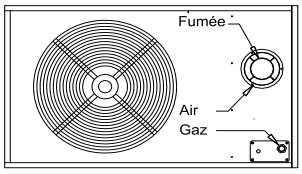

Connections for 50/60/80 models

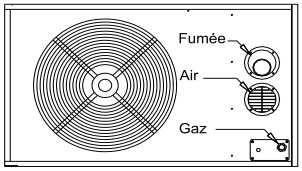

	A	B	C	Ø gaz
MH16 Eco	810	780	356	1/2''
MH21 Eco	1 040	800	460	1/2''
MH28 Eco	1 040	820	460	1/2''
MH35 Eco	1 040	840	510	1/2''
MH50 Eco	1 040	840	700	1/2''
MH60 Eco	1 120	840	820	3/4''
MH80 Eco	1 120	840	1075	3/4''

MV Eco models

Vertical Gas Air Heater MV Eco is equipped with an axial fan.

It has been designed for a vertical blowing and are equipped with a simple deflexion grid or circular grid (picture), depending on models.

It is particularly well adapted for combining heating and reducing air stratification.

2-2 Technical features of vertical suspended gas air heaters MV Eco

TYPE		MV35 Eco	MV50 Eco	MV60 Eco	MV80 Eco
Rated heat input	kW	34	50	60	80
Rated heating capacity	kW	31,5	46,3	55,5	74
Efficiency	%	92,5	92,5	92,5	92,5
Minimum rated heating capacity	kW	25,2	37	44,4	59,2
Efficiency (min. rated heating capacity)	%	92	92	92	92
Speed rotation	tr/mn	1050	1350	910	900
Air flow rate at 50 °C	m^3/h	3250	5300	6500	8800
Air DeltaT°	°C	26	25	25	25
Installation height (min./max.)	m	4/6	5/8	6/10	6/10
Gas flow rate at 15°C G20	20 mbar	3.60 m^3/ h	5.29 m^3/ h	6.35 m^3/ h	8.47 m^3/ h
Exhaust diam.	mm	80 / 125	130	130	130
Air inlet diam.	mm		130	130	130
Voltage		230 Volts / 50 Hz - IP42			
Electrical power	VA	320	500	580	750
Mass	kg	92	125	152	194
Sound pressure - 5m in free field	dBA	46	56	54	53

Working principle of MV Eco models

MV Eco gas air blowers include two functions :

Heating—it operates as a gas air blower

De-stratification— the blowing fan will run according the air temperature

CAUTION :

When you choose the appliances, do add destratificators (see picture), to reach the advised mixing rate*.

Building volume	*mixing rate	Building volume	*mixing rate
Less than 5 000 m^3/h	3.5 volumes/hour	5 000 to 20 000 m^3/h	3 volumes/hour
20 000 to 50 000 m^3/h	2.5 volumes/hour	Over 50 000 m^3/h	2 volumes/hour

Size features for MV Eco models

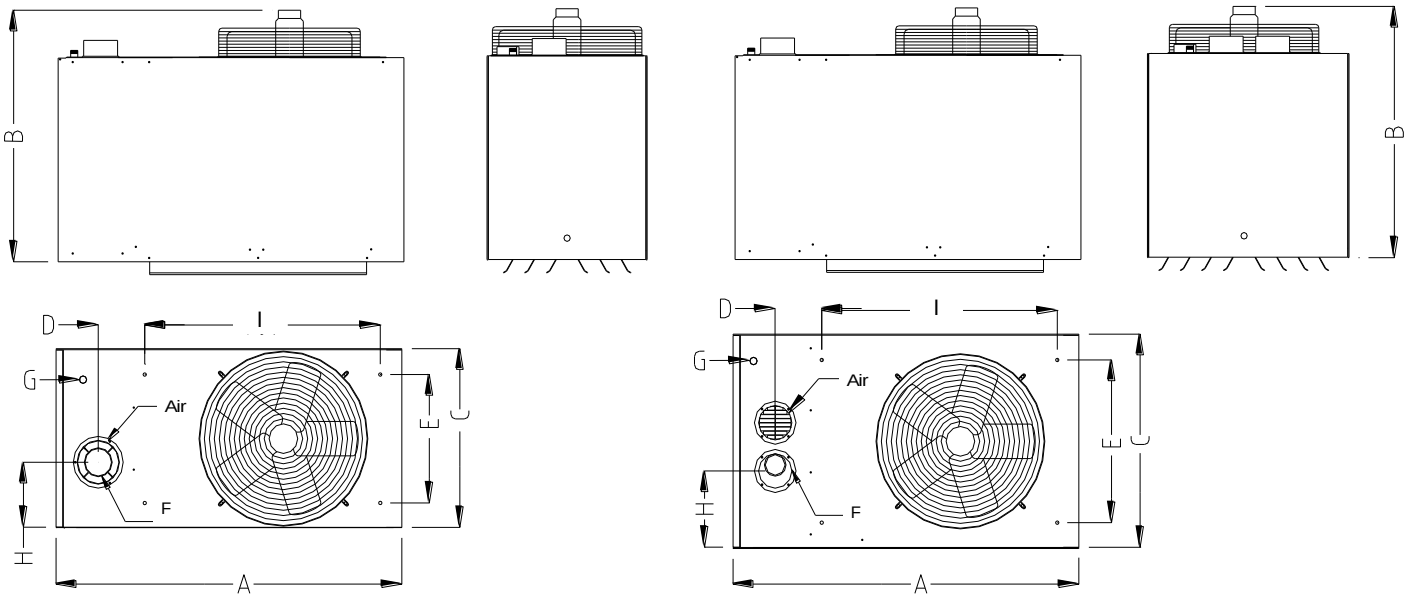

Type	MV35 Eco	MV50 Eco	MV60 Eco	MV80 Eco
A	1 040	1 040	1 120	1 120
B	840	840	840	840
C	510	700	820	1 075
D	125	134.5	149.5	149.5
E	430	610	730	———
H	185	250	355	460
I	677	677	677	———
Ø F	80/125	130	130	130
Ø Air		130	130	130
Ø G (gaz)	1/2''	1/2''	3/4''	3/4''

Height of installation for MV Eco models

MV Eco models are hung on the top by 4 M8 set nuts (except for MV80 Eco)

Blowing is operated downwards. Installation height shall be neither lower, nor higher than the recommended one..

To put **MV Eco** gas air heaters to best use, here after recommended installation heights have to be respected.

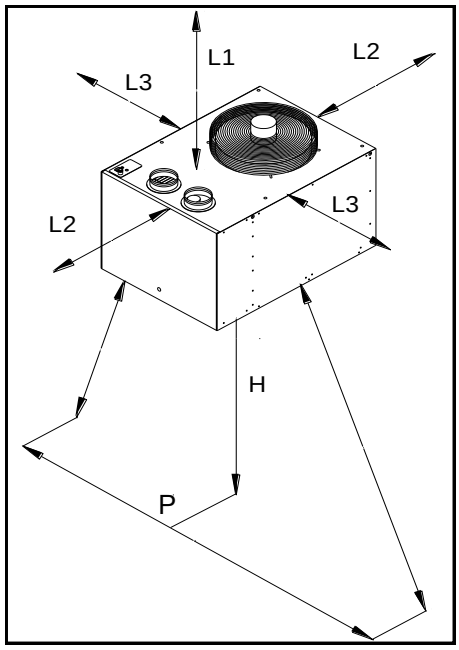

Type		MV35 Eco	MV50 Eco	MV60 Eco	MV80 Eco
L1 (min.)	**m**	0,45	0,45	0,50	0,60
L2 (min.)	**m**	1	1	1	1
L3 (min.)	**m**	1	1	1	1
H : Height (min./max.)	**m**	4 / 6	5 / 8	6 / 10	6 / 10
P : Airthrow	**m**	P = 23-H	P = 28-H	P = 28-H	P = 28-H

MC Eco Models

MC Eco Gas air heater is equipped with a centrifugal fan and standard features include an inlet box.
It has been designed for direct blowing or to be connected to a duct.

Dampers and filters can be added to the inlet box (fan box).

2-3 Technical features of centrifugal suspended gas air heaters MC Eco

TYPE		MC21 Eco	MC28 Eco	MC35 Eco	MC50 Eco	MC60 Eco	MC80 Eco
Rated heat input	kW	20	27	34	50	60	80
Rated heating capacity	kW	18,5	25	31,5	46,3	55,5	74
Efficiency	%	92,5	92,5	92,5	92,5	92,5	92,5
Minimum rated heating capacity	kW	14,8	20	25,2	37	44,4	59,2
Electrical power engine	kW	0,25	0,37	0,37	0,75	1,1	2 x 0,75
Air flow rate curve (free inlet) Fan model Engine coupling Maximum engine current	Nb. Type Speed A	2* BD25/25M6 1/3 —— 2	4* BD28/28M6 1/2 MV 3.45	5* BD28/28M6 1/2 GV 3.45	9* BD33/33M6 1 MV 6	10* BD33/33M6 1 —— 6	- BD33/33M6 2 PV ——-
Air flow rate curve (with filter) Fan model Engine coupling Maximum engine current	Nb. Type Speed A	1 BD25/25M6 1/3 —— 2	3 BD28/28M6 1/2 GV 3.45	6 BD28/28M4 3/4 —— 5	——	——	——
Gas flow rate at 15°C G20 G25 G31	20 mbar 25 mbar 37 mbar	2.12 m^3/ h 2.35 m^3/ h 1.56 kg/h	2.86 m^3/ h 3.18 m^3/ h 2.11 kg/h	3.60 m^3/ h 4.00m^3/ h 2.66 kg/h	5.29 m^3/ h 5.88 m^3/ h 3.91 kg/h	6.35 m^3/ h 7.06 m^3/ h 4.69 kg/h	8.47 m^3/ h 9.41 m^3/ h 6.25 kg/h
Exhaust diam.	mm	80 / 125	80 / 125	80 / 125	130	130	130
Air inlet diam.	mm				130	130	130
Voltage		230 Volts / 50 Hz - IP42					
Electrical power	VA	860	900	920	1350	1700	2400
Mass	kg	99	117	125	165	180	260

***Standard configuration**

Assembly of blowing section

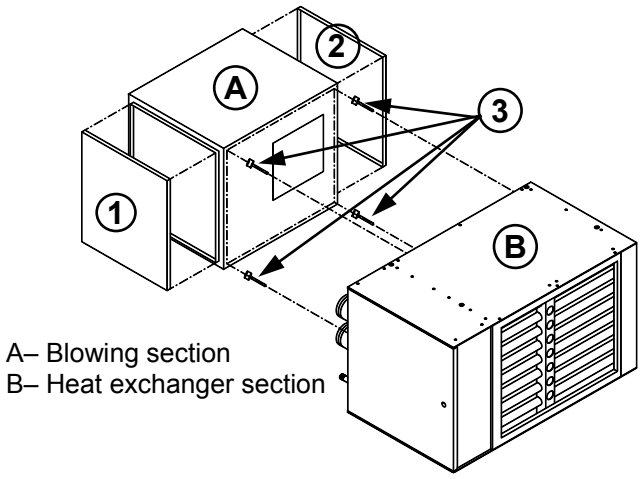

Assembly the blowing box (A) to the heat exchanger box (B) thanks to the provided 4 M8 BTR nuts (3). Remove the side panels (1), (2)

CAUTION : Switch off main power before disassembling

Fan characteristics:

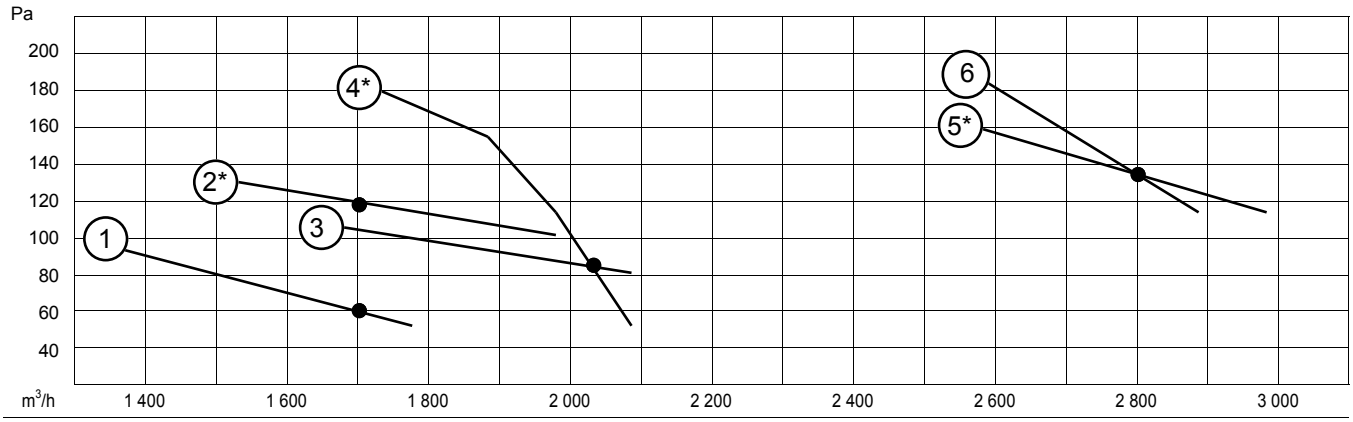

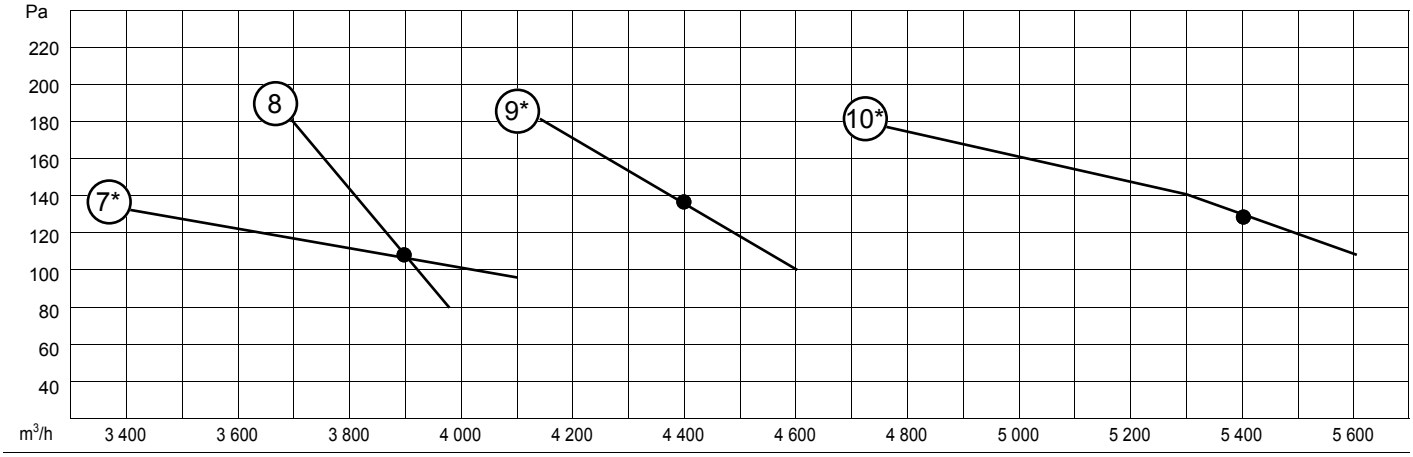

Size features of MC Eco air heaters and its optional accessories :

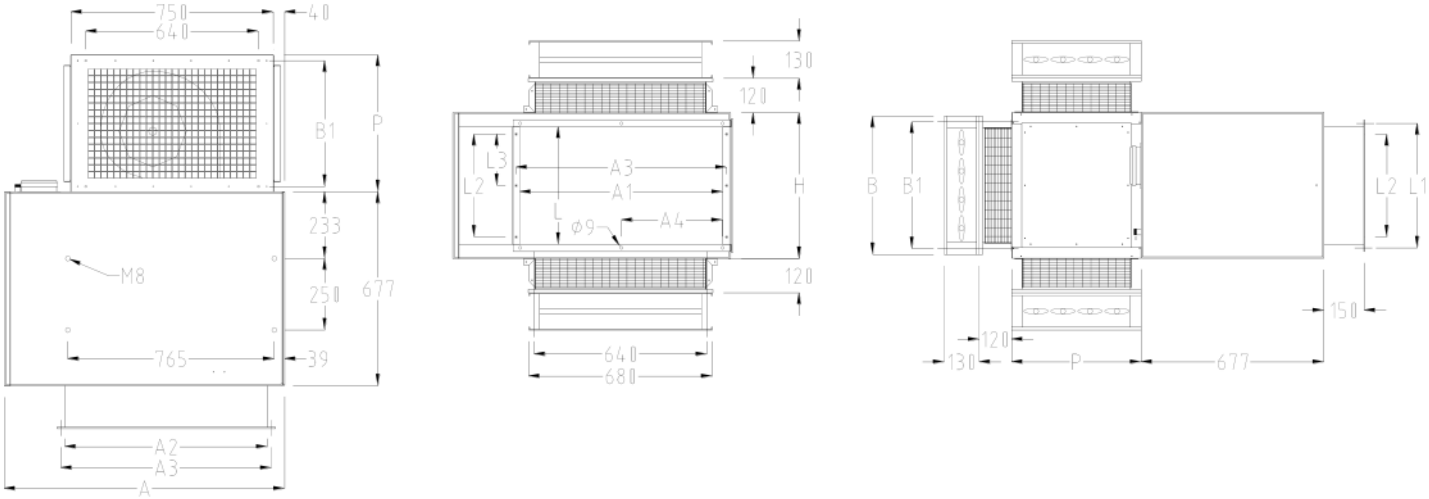

	A	A1	A2	A3	A4	B	B1	H	L	L1	L2	L3	P	ØGaz
MC21 Eco	1040	750	750	780	388	480	440	460	356	381	310	155	480	1/2''
MC28 Eco	1040	750	750	780	388	480	440	460	356	381	310	155	480	1/2''
MC35 Eco	1040	750	750	780	388	480	440	510	406	431	360	180	480	1/2''
MC50 Eco	1040	750	750	780	388	580	540	700	594	618	540	270	580	1/2''
MC60 Eco	1120	750	750	780	388	580	540	825	720	775	690	220	580	3/4''
MC80 Eco	1120	750	750	780	388	1080	1040	1075	1020	1040	940	250	680	3/4''

Caution : for MC80 Eco, return air from rear side or right side

3– GAS AIR HEATERS INSTALLATION (see instructions provided with the brackets)

3-1 Advice for installation

In order to secure the operation of the appliance, please respect the hereafter indications:

- A minimum distance of 430 mm between the wall and the back of the appliance shall be respected.
- Check that there is enough space for the door opening.
- The appliance shall be installed at a minimum distance of 200 mm from the roof and 2000 mm from the floor.

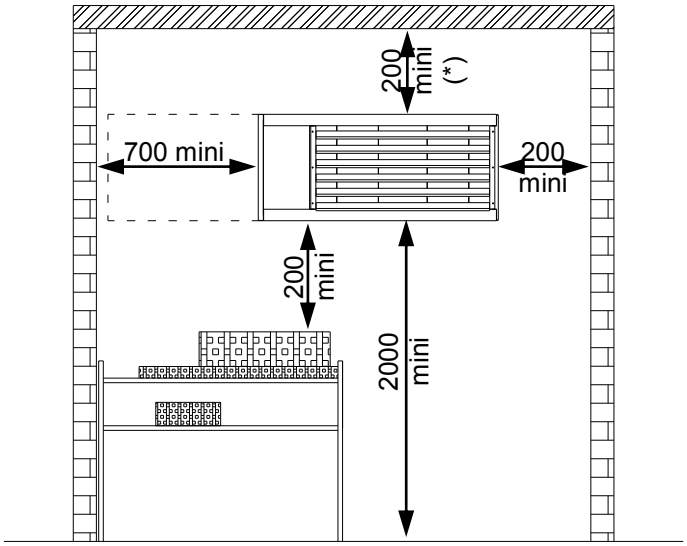

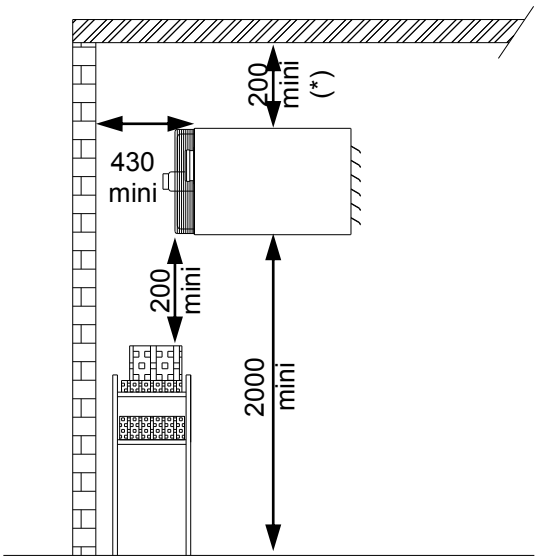

(*) : See page 7 for MV Eco models

3-2 List of standard supports

Reference codes:

Axial gas air heater	MH Eco	16 Eco	21 Eco	28 Eco	35 Eco	50 Eco	60 Eco	80 Eco
Rotating wall bracket	**SMR**	3500070	3500048					
IPN fastening kit for SMR	**KIPN**	3500047						
Fixed wall bracket	**SMF**	3500071					3500049	
IPN fastening kit for SMF	**KIPN1**	3500074						

Centrifugal gas air heater (without dampers & filters)	MC Eco		21 Eco	28 Eco	35 Eco	50 Eco	60 Eco	80 Eco
Fixed wall bracket	**SMF**		3500049					

Vertical gas air heater	MV Eco		35 Eco	50 Eco	60 Eco	80 Eco
Suspension bracket	**SDS**		3500050			3500067

3-3 SMR rotating brackets for MH16 Eco to MH50 Eco type

The SMR kit (code 3500070 or 3500048) is a wall-mounted rotating bracket for gas air heaters (**MH16 Eco to MH50 Eco type ***) which can be completed by the **KIPN kit** (code 3500047) if mounted on a steel construction frame.

**SMR kits are incompatible with gas air heaters of MH60 Eco and MH80 Eco types.*

Mounting: See instructions provided with brackets.

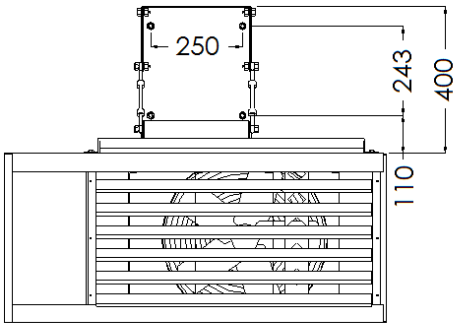

SMR kit

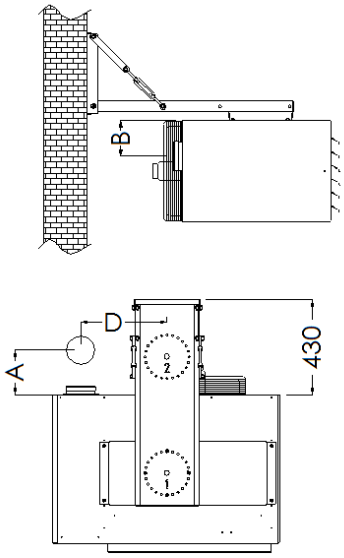

SMR + KIPN kit

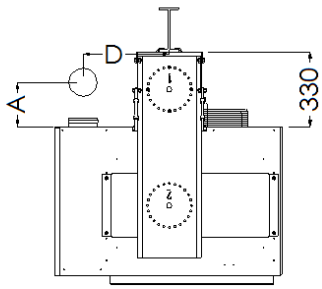

Caution: check the hanging device strength

	MH16 Eco		MH21 Eco		MH28 Eco		MH35 Eco		MH50 Eco	
Connection	**B22**	**C32**	**B22**	**C32**	**B22**	**C32**	**B22**	**C32**	**B22**	**C32**
A (mm)	115	125	115	125	115	125	115	125	135	205
B (mm)	110		160		160		185		250	
D (mm)	279		394		394		394		394	

3-4 SMF fixed wall brackets for MH16 Eco to MH50 Eco type

The SMF kit (code 3500071) is a wall-mounted fix bracket for gas air heaters (**MH16 Eco to MH50 Eco type**) which can be completed by the **KIPN1 kit** (code 3500074) if mounted on a steel construction frame.

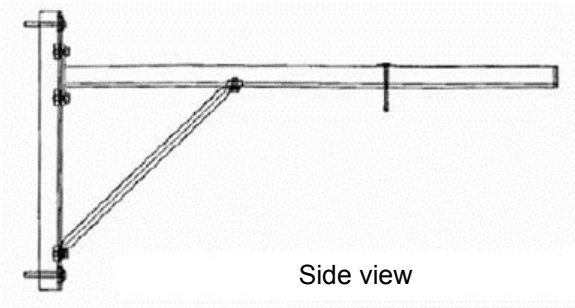

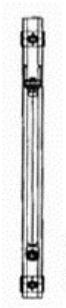

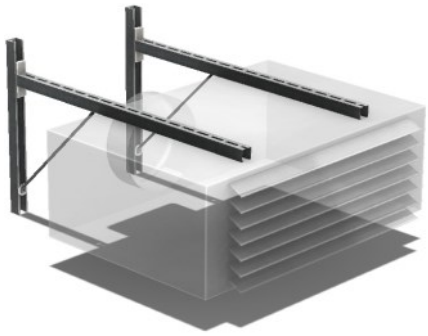

Caution: Check the hanging device strength

Caution: Fix the gas air heater below devices

Limiting spaces between walls and gas air heaters:

Schematic diagram:

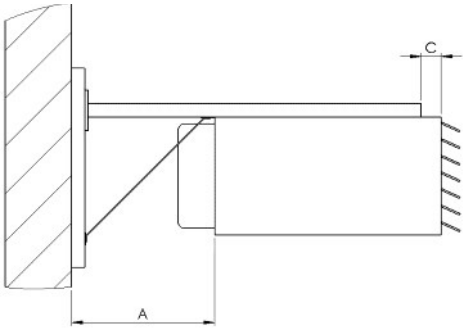

Pitch holes

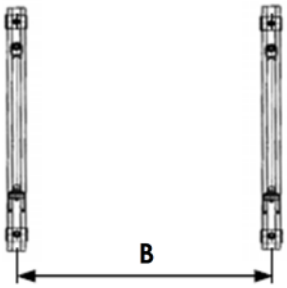

Type	Minimum distance (mm)		Pitch holes (mm)
	A	C	B
MH16 Eco	430	60	535
MH21 Eco **MH28 Eco** **MH35 Eco** **MH50 Eco**			765

Détails:

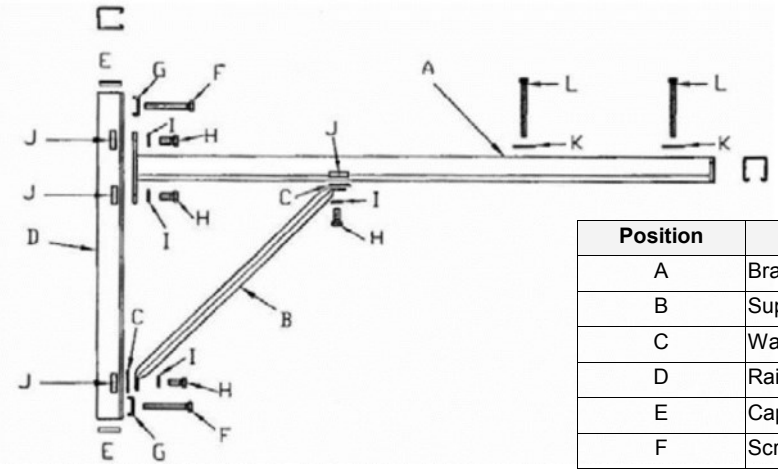

Position	Description	Type	Quanti
A	Bracket	41/41/2,0 lg.1010	2
B	Support	550-350 lg.530	2
C	Washer	10/40	4
D	Rail	41/41/2.5 lg.600	2
E	Cap	41/41	6
F	Screw	M10x80	4
G	Clamp	41/10	4
H	Screw	M10x25	8
I	Washer	10/20	8
J	Rail nut	M10	8
K	Washer	8/40	4
L	Screw	M8x100	4

3-5 SMF fixed wall brackets for MH60 Eco and MH80 Eco type

The SMF kit (code 3500049) is a wall-mounted fix bracket for gas air heaters (**MH60 Eco and MH80 Eco types**)

Mounting: See instructions provided with brackets.

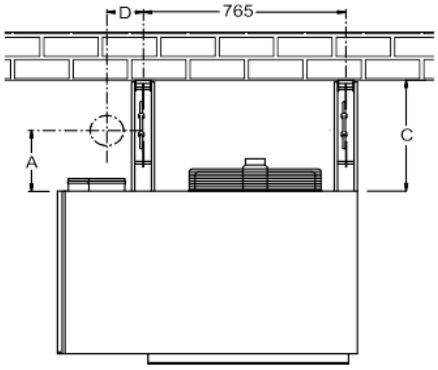

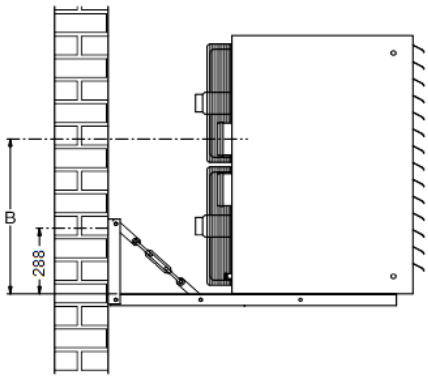

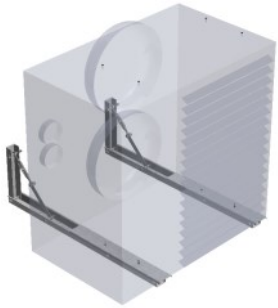

Caution: Check the hanging device strength—Fix the unit over the brackets

	MH60 Eco		MH80 Eco	
Connection	**B22**	**C32**	**B22**	**C32**
A (mm)	135	205	135	205
B (mm)	460		645	
C (mm)	520		520	
D (mm)	120		135	

3-6 SMF fixed wall brackets for MC21 Eco to MC60 Eco type

CAUTION: this bracket is not designed for a mounting with dampers and/or filters

The SMF kit (code 3500049) is a wall-mounted fix bracket for gas air heaters (**MC Eco type)**

Mounting: See instructions provided with brackets.

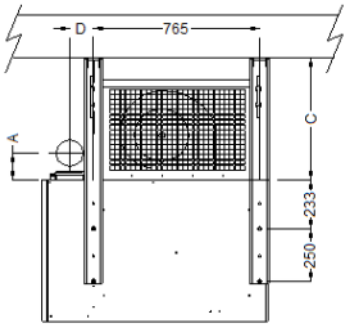

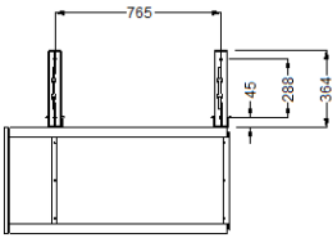

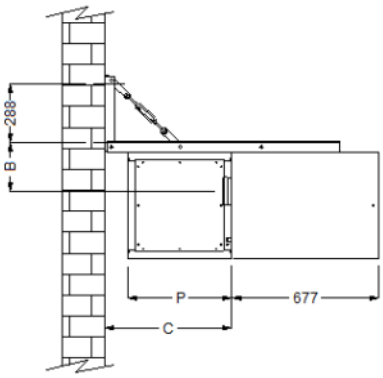

Caution: Check the hanging device strength—Fix the unit below the brackets

	MC21 Eco		MC28 Eco		MC35 Eco		MC50 Eco		MC60 Eco	
Connection	**B22**	**C32**	**B22**	**C32**	**B22**	**C32**	**B22**	**C32**	**B22**	**C32**
A (mm)	115	125	115	125	115	125	135	205	135	205
B (mm)	205		205		230		295		410	
C (mm)	670		670		670		670		670	
D (mm)	105		105		105		105		120	
P (mm)	480		480		480		580		580	

4– WIRING DIAGRAMS

4-1 Wiring diagram of centrifugal gas air heaters MC60 Eco - MC80 Eco

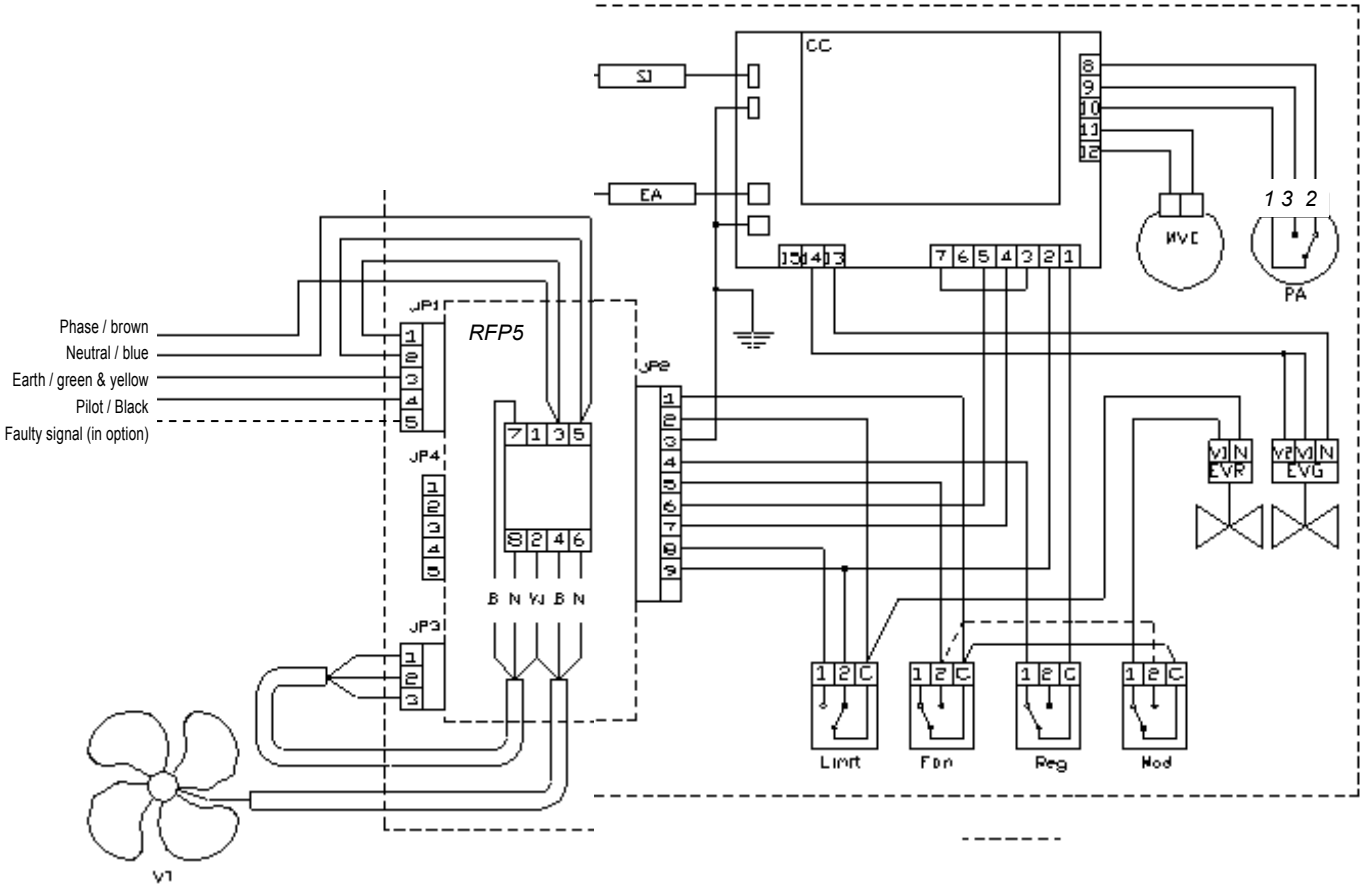

4-2 Wiring diagram of gas air heaters (Eco type)

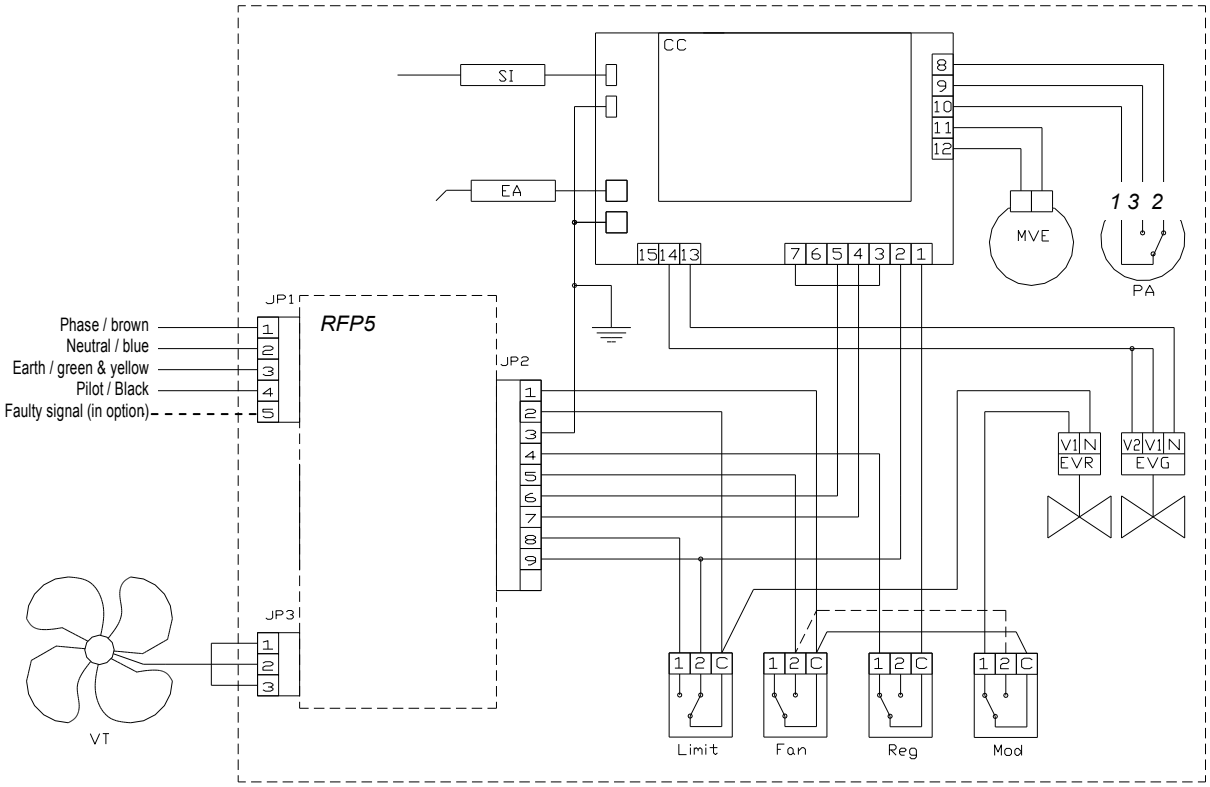

------ Only for MV Eco type

The modulation air thermostat bulb (Mod) is located on the fan grid for MV models and in air flow for other models

VT	Air fan
RFP5	Pilot wire receptor
Limit	Overheat air thermostat—manual reset
Fan	Fan air thermostat
Reg	Control burner air thermostat
Mod	Modulating burner air thermostat
CC	Control box

MVE	By products fan
PA	Air combustion pressure switch
SI	Ionisation electrode
EA	Ignition electrode
EVR	Modulating gas valve
EVG	Solenoid gas valve

Do not stop mains supply, wait <u>fan stop.</u>

Pilot wire receiver (RFP5)

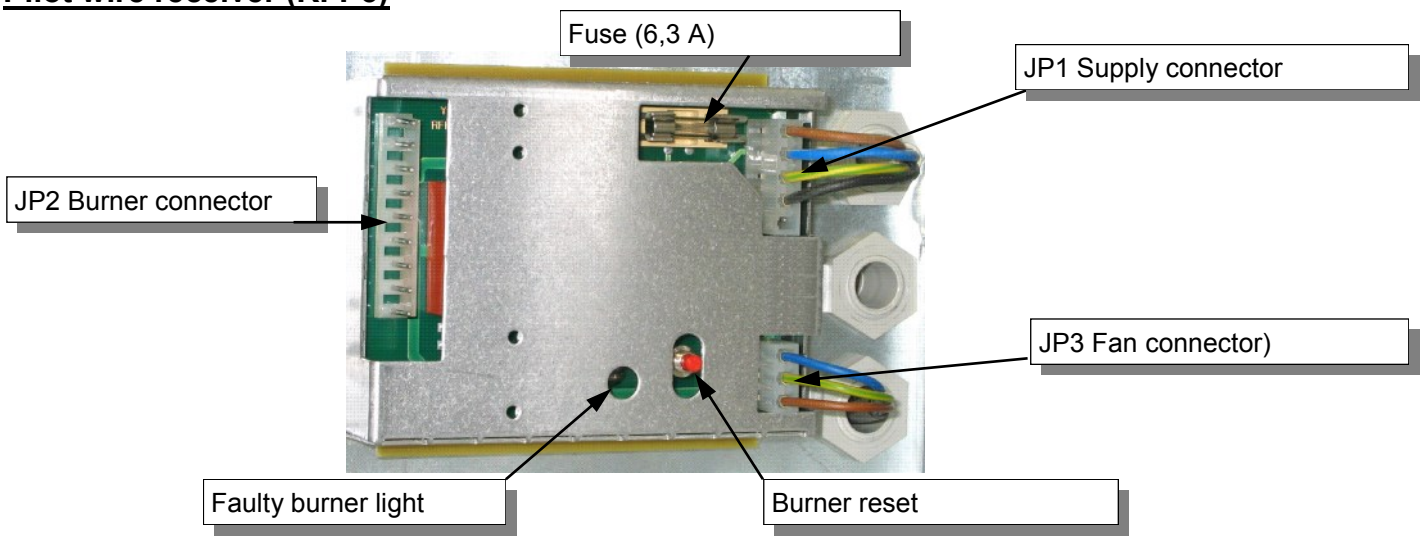

4-3 Pilot wire concept

Caution! The air blowers cannot be piloted by a standard thermostat (with relay). Only the specific "pilot wire" thermostats supplied by Solaronics can pilot the air blowers.

The goal of the pilot wire is to limit the number of wires to connect.
The same pilot wire allows to transmit an order:

- Of ventilation
- Of heating
- Of reset

The concept of air blower piloting is described here below

Wave shape sent by the temperature regulator		Order transmitted to the gas air heater
No wave		Stop
Positive half-wave		Ventilation
Nagative half-wave		Heating
Full wave*		Reset

* The reset order is a temporary impulsion and must not be permanent.

Pilot wire concept scheme

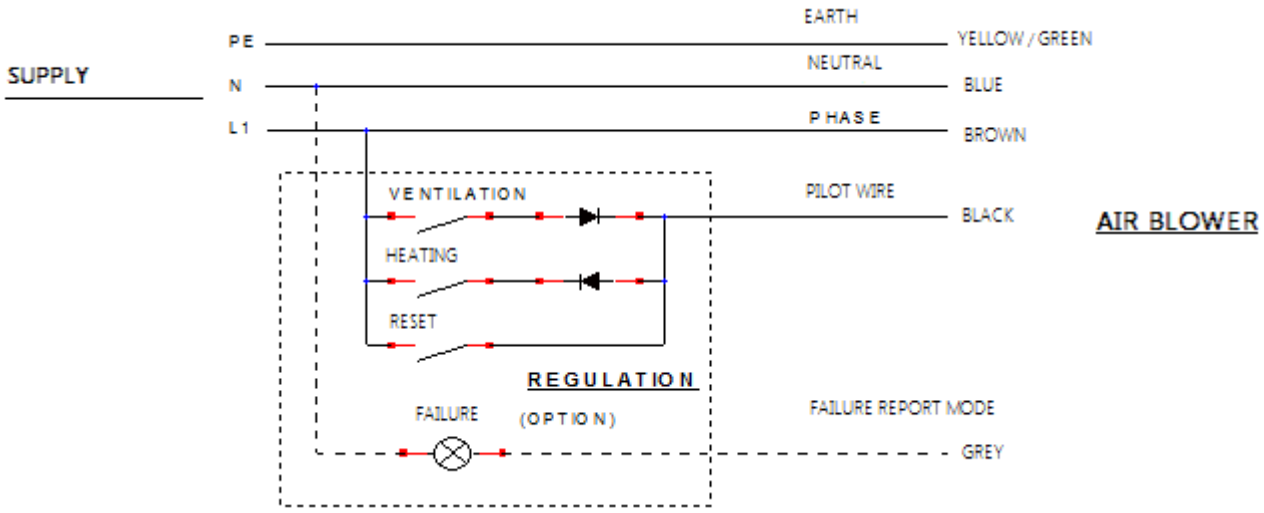

4-4 Remote faulty signal (in option)

The remote faulty signal kit (code 3510232) consists of replacing the 4-wire supply cable by a 5-wire cable.
The fifth wire (grey) is the failure report.
When the air blower is in failure it sends a 230V voltage signal that may be used to switch on a lamp or a relay.

Remote faulty signal kit - Code 3510232

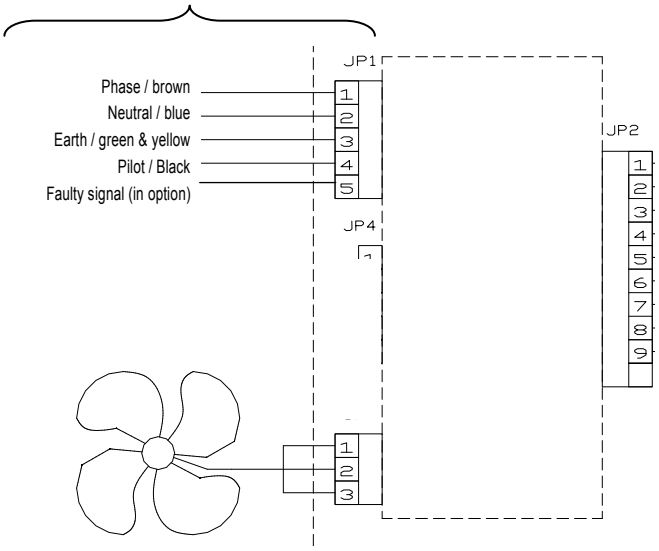

4-5 Connection for standard controllers

TM1 Thermostat

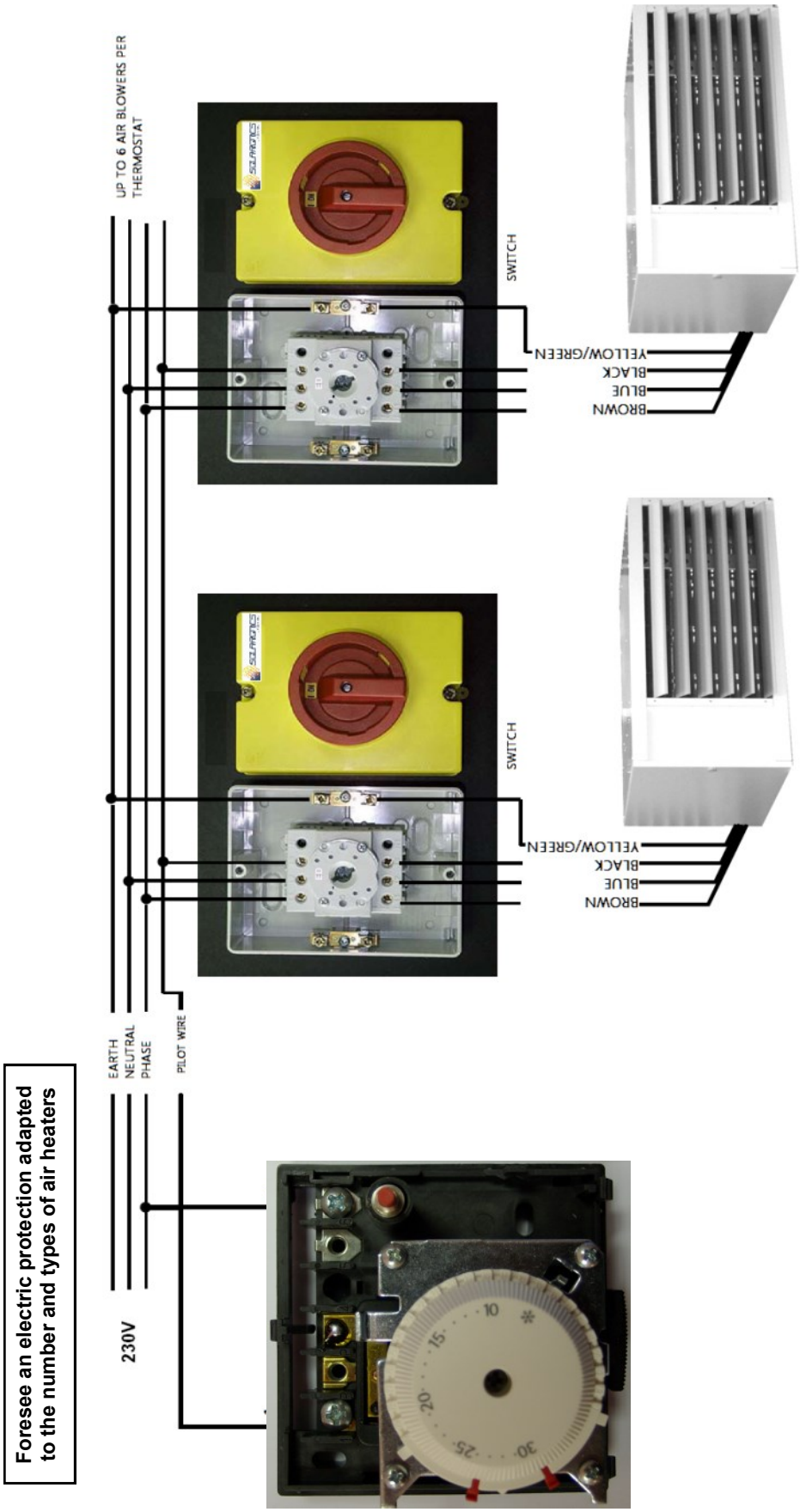

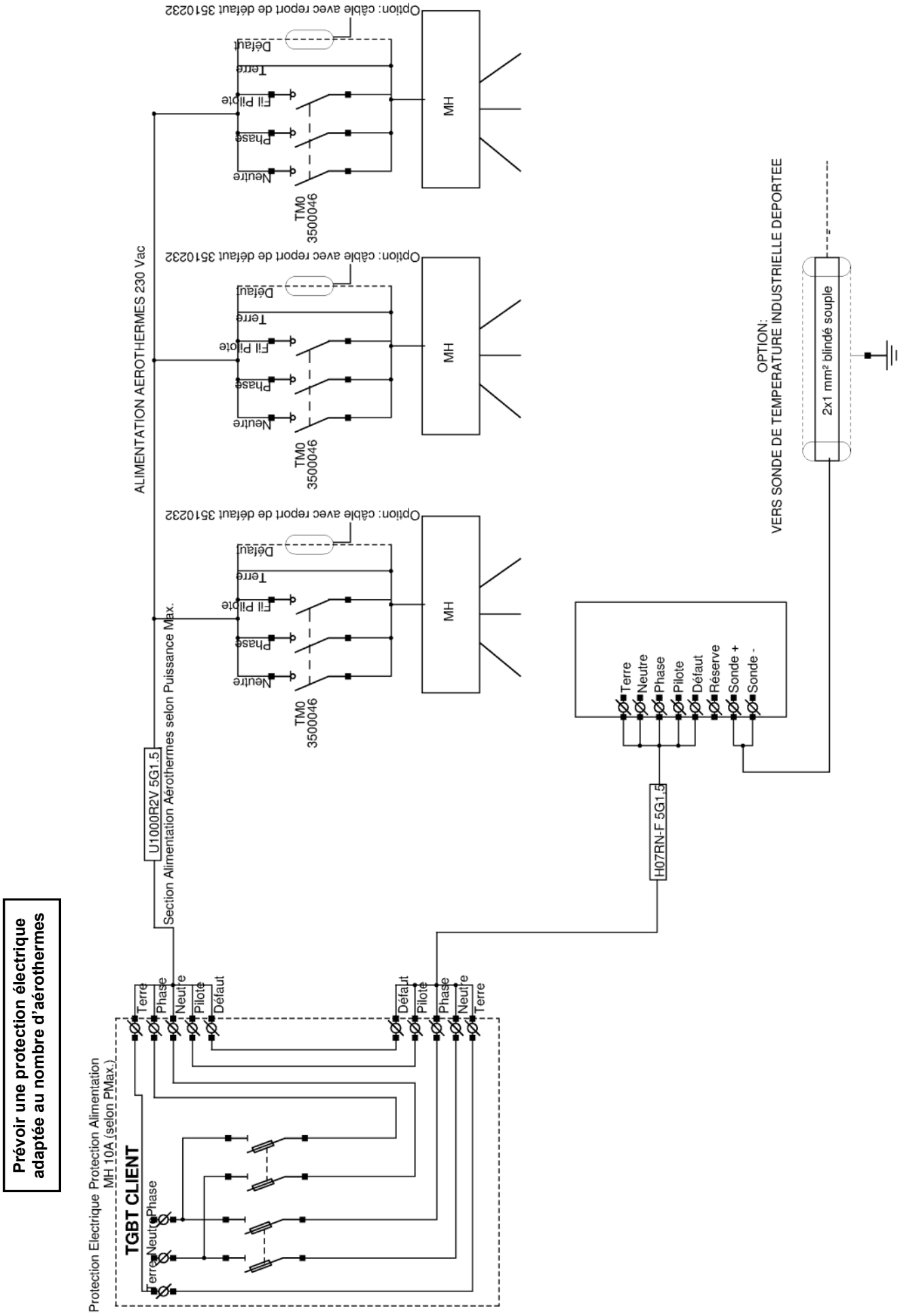
Prévoir une protection électrique adaptée au nombre d'aérothermes
Protection Electrique Protection Alimentation MH 10A (selon PMax.)
TGBT CLIENT
Terre
Neutre
Phase
Pilote
Défaut
Section Alimentation Aérothermes selon Puissance Max.
U1000R2V 5G1.5
ALIMENTATION AEROTHERMES 230 Vac
Neutre
Phase
Fil Pilote
Terre
Défaut
TM0 3500046
Option: câble avec report de défaut 351023 2
MH
H07RN-F 5G1.5
Réserve
Sonde +
Sonde -
OPTION:
VERS SONDE DE TEMPERATURE INDUSTRIELLE DEPORTEE
2x1 mm² blindé souple

5– FLUE CONNECTIONS

5-1 General points

During the commissioning and maintenance, make sure that:
- Air combustion inlet and by-products outlets are not blocked.
- For coaxial flue assembly, check that the 2 circuits (air combustion inlet and by-products outlet) are independent and airtight ; Check pipes assembly and seals..
- Not to damage the flue pipes seals when assembling the conduits onto the device, check the sealing after assembly..
- The assembly of the flue pipes must be carried out so that no water can penetrate into the device (danger electrical hazard). For this purpose, please use a purge T-piece and a condensate drain, …
- For greater lengths, it is essential to provide a condensate drain; this also applies to assemblies using coaxial flue.

5-2 Connection of flue pipe- B22—for MH, MC and MV Eco types

Air combustion is taken directly in the building and by-products are released outside trough a vertical chimney

B22 - for MH Eco/MC Eco 16/21/28/35/50/60/80 type

Air combustion is taken inside the building and by-products are released outside.

The **K B22-80 (ø80), K B22-100 (ø100)** and **K B22-130 (ø130) kits** are made of a T piece (4), 2 one m pipes (3), a terminal part (1). The **K B22-80 kit** is delivered with a sliding drip.
The flue shall be higher than the roof level (400mm minimum).
H dimension is equal to 2150 mm.
It is possible to shorten, lengthen or lead astray the flue thanks to a wide range of flue accessories (0.5 or 1 m pipes, elbows,…)

** Remark: Flashing(2) is not included*

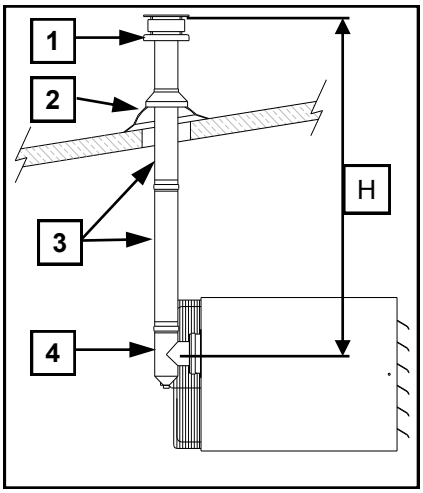

Kit H = 2.15 m

B22 - for MV Eco 35/50/60/80 type

L'air de combustion est aspiré directement dans le local et l'évacuation des fumées se fait verticalement en toiture.

Air combustion is taken inside the building and by-products are released outside.

The **K B2280V (ø 80)** and **K B22130V (ø 130) kits** are made of a 90° elbow (6), one pipe of 0,5 m (5), a T piece (4), two pipes of 1 m (3) and one terminal part (1). The flue shall be higher than the roof level (400 mm minimum).
H dimension is equal to 2150 mm.
It is possible to shorten, lengthen or lead astray the flue thanks to a wide range of flue accessories (0.5 or 1 m pipes, elbows,…)

** Remark: Flashing(2) is not included*

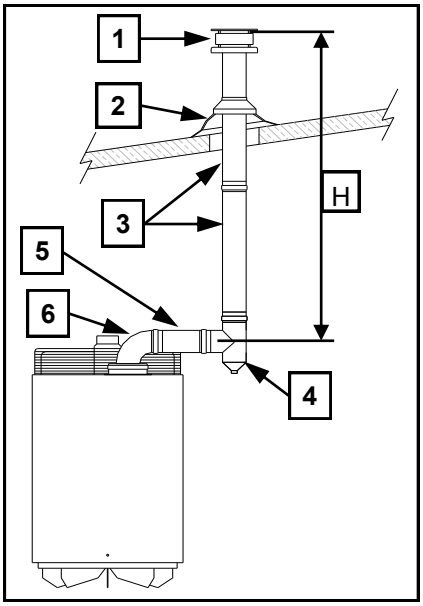

Kit H = 2.15 m

CAUTION

Check that air renewal is sufficient: a minimum of 100 m3/h air flow per Minigaz is required
Flue pipes sections shall at less be equal to the starting section. Flue pipes shall be vertical or at the maximum with a 45 °angle.
Total length of flue shall not exceed 6 m (taking into account than pressure drops in a 45° or 90° elbow are similar to losses in a 1 m pipe).
If the length of the outside flue is more than 2 meters an insulation shall be installed

5-3 Connection of horizontal coaxial flue pipe – C12 — for MH and MC Eco types

Connection of pipes has to be done horizontally.

Correct assembly

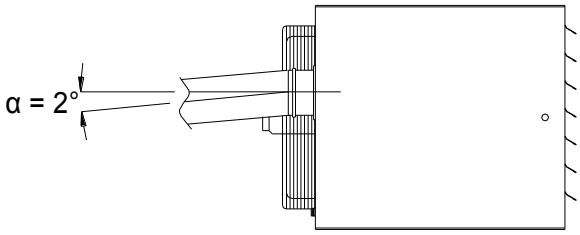

Incorrect assembly

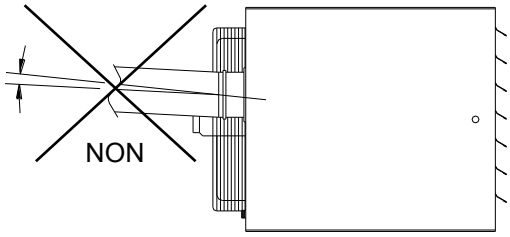

Assembly of the flue pipes must be carried out using a slope opposed to the device, α = 2° minimum.

C12 - for MH Eco 16/21/28/35 an MC Eco 21/28/35 type

Combustion air is taken outside and by-products are released outside. The connection is done horizontally.

The **K C12-80125 (ø 80/125) kit** is made of a concentric flue (1) and of two rubber flanges (2) which enable a perfect finish.
The coaxial flue of 80/125 diam. is directly connected to the air blower.
The (A) dimension shall be between 200 and 350 mm. When coaxial flue is connected to the air blower the dimension (B) is 750 mm.

It is possible to shorten, lengthen or lead astray the flue thanks to a wide range of flue accessories (3) (pipes, elbows, …)

C12 - for MH/MC Eco 50/60/80 type

Combustion air is taken outside and by-products are released outside.

The **K C12-130200 (ø 130/200) kit for 50/60/80 air blower type** are made of two lengths of 250 mm (2), of one horizontal terminal (1) and two wall plates for finish.
.

	KC12-130200
Ø Flue (mm)	130 / 200
B	940 mm

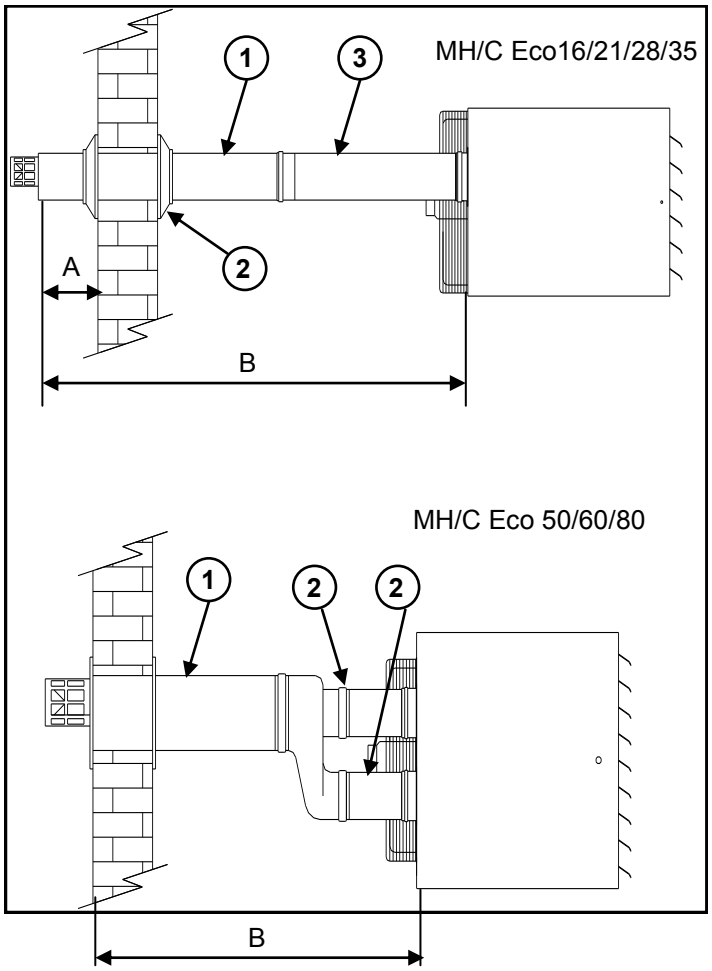

The use of airtight pipes implies a perfect air tightness of the junctions. Thus in order to make the assembly easy it is necessary to use a non corrosive lubricant (for example: soap water).

CAUTION

Junctions shall be airtight and rigid.
Flue pipes sections shall at less be equal to the starting section. Flue pipes shall be vertical or at the maximum with a 45 °angle.
Total length of flue shall not exceed 6 m (taking into account than pressure drops in a 45° or 90° elbow are similar to losses in a 1 m pipe).
If the length of the outside flue is more than 2 meters an insulation shall be installed.

5-4 Connection of vertical coaxial flue pipe - C32 - for MH and MC Eco ty

C32 - for MH Eco 16/21/28/35 and MC Eco 21/28/35 type

Combustion air is taken outside and by-products are released outside. The connection is done vertically.

The KC32-80125 (ø 80/125) is made of a vertical coaxial flue (1) and of a 90° coaxial elbow (2).

Roof water tightness will be made with a standard roof seal or hand made up according the kind of roof.

It is possible to shorten, lengthen or lead astray the flue thanks to a wide range of flue accessories (pipes, elbows,…).
The maximum length of the coaxial flue + its extension shall not exceed 6 m.

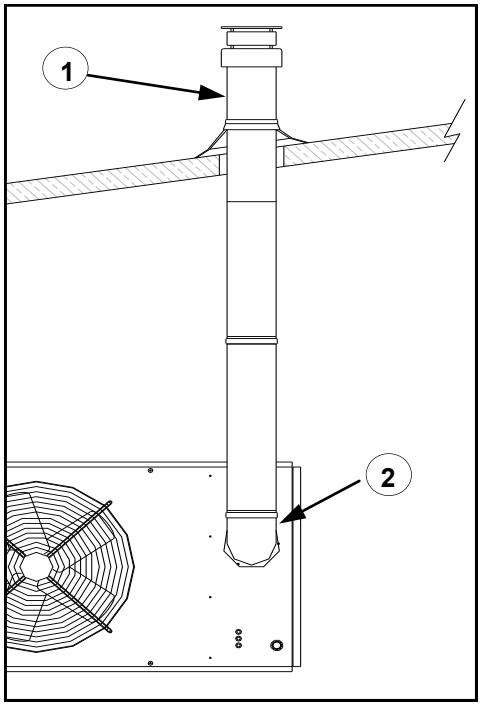

Length of coaxial flue	1155 mm
Maximum length (coaxial flue + extension)	6 m
Outside diameter of coaxial flue	125 mm
Diameter of coaxial extension	125 mm

C32 - for MH Eco 50/60/80 and MC Eco 50/60/80 type

Combustion air is taken outside and by-products are released outside. The connection is done vertically.

The **KC32-130200 (Ø130/200) kit** for MH/C Eco 50/60/80:
- -1 vertical coaxial flue (1)
- -2 90° elbows – diam. 130 mm (2)
- -1 pipe - length 500 mm – diam. 130 mm
- -1 pipe –length 250 mm - diam. 130 mm
- -1 adaptive piece

Roof watertight will be made with a standard roof seal (5) or hand made up according the kind of roof

It is possible to shorten, lengthen or lead astray the flue thanks to a wide range of flue accessories (pipes, elbows,…).
The maximum length of the coaxial flue + its extension shall not exceed 6 m.

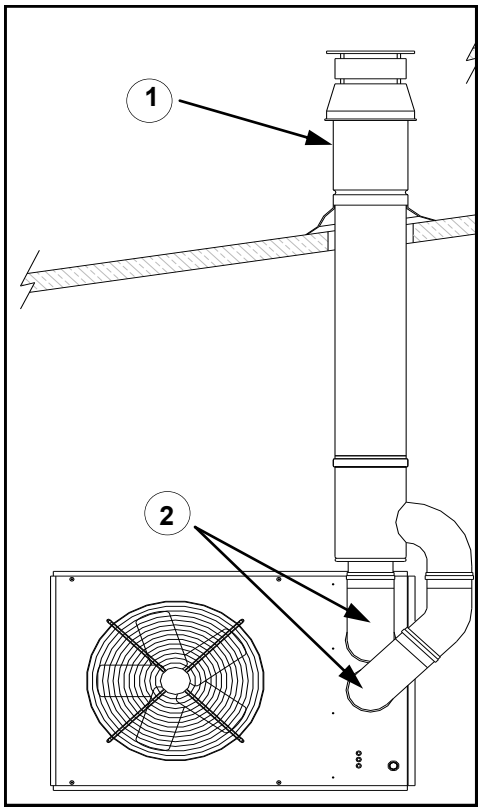

	KC32-130200
Length of coaxial flue	1850 mm
Maximum length (coaxial flue + extension)	6 m
Outside diameter	200 mm
Diameter of pipe (fumes)	130 mm
Diameter of pipes (air)	130 mm

The use of airtight pipes implies a perfect air tightness of the junctions. Thus in order to make the assembly easy it is necessary to use a non corrosive lubricant (for example: soap water).

CAUTION

Junctions shall be airtight and rigid
Flue pipes sections shall at less be equal to the starting section. Flue pipes shall be vertical or at the maximum with a 45 °angle.
Total length of flue shall not exceed 6 m (taking into account than pressure drops in a 45° or 90° elbow are similar to losses in a 1 m pipe).
If the length of the outside flue is more than 2 meters an insulation shall be installed.

5-5 Connection of vertical coaxial flue pipe - C32 - for MV Eco type

C32 - for MV Eco 35

Combustion air is taken outside and by-products are released outside. The connection is done vertically.

The KC32-80125V (ø 80/125) is made of a vertical coaxial terminal (1).

Roof water tightness will be made with a standard roof seal (5) or hand made up according the kind of roof.

It is possible to shorten, lengthen or lead astray the flue thanks to a wide range of flue accessories (pipes, elbows,…).

Length of coaxial flue	1155 mm
Maximum length (coaxial flue + extension)	6 m
Outside diameter	125 mm
Diameter of coaxial extension	125 mm

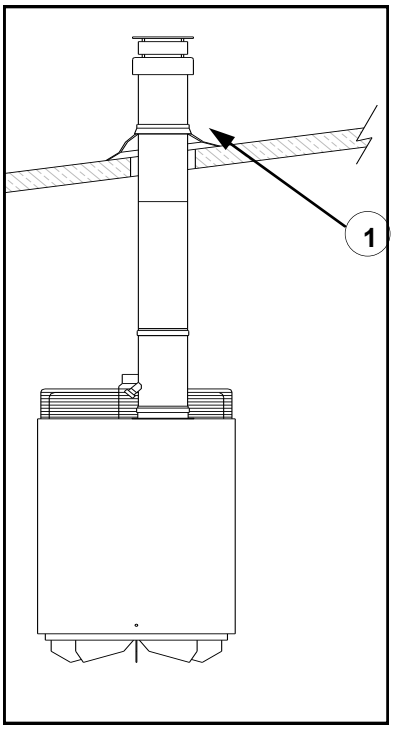

C32 - for MV Eco 50/60/80 type

Combustion air is taken outside and by-products are released outside. The connection is done vertically.

The KC32-130200V (ø 130/200) kit is made of a vertical coaxial terminal (1), an adaptive piece and of two pipes of 250 mm (2).

Roof watertight will be made with a standard roof seal or hand made up according the kind of roof.

It is possible to shorten, lengthen or lead astray the flue thanks to a wide range of flue accessories (pipes, elbows, …).

Length of coaxial flue	1850 mm
Maximum length (coaxial flue + extension)	6 m
Outside diameter	200 mm
Diameter of pipe (fumes)	130 mm
Diameter of pipe (air)	130 mm

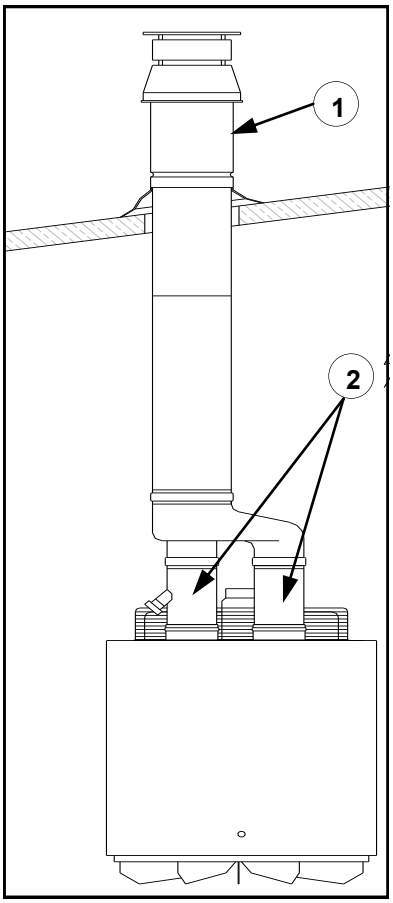

The use of airtight pipes implies a perfect air tightness of the junctions. Thus in order to make the assembly easy it is necessary to use a non corrosive lubricant (for example: soap water).

CAUTION

Junction shall be airtighted and rigid.
Flue pipes sections shall at less be equal to the starting section. Flue pipes shall be vertical or at the maximum with a 45 °angle.
Total length of flue shall not exceed 8 m (taking into account than pressure drops in a 45° or 90° elbow are similar to losses in a 1 m pipe).
If the length of the outside flue is more than 2 meters an insulation shall be installed

6– GAS DATA

6-1 Gas modification

Gas air blowers are equipped with atmospheric burners which can be used with Natural Gas or Propane.

THESE CHANGES HAVE TO BE DONE BY QUALIFIED PEOPLE

For gas modification, do apply the hereafter procedure :

1– Remove the main supply cable connector and switch off gas supply.

2– Unscrew the flange of the gas valve (Rep. 1) and the 3 screws (Rep.2) which fixes the gas manifold on the burner.

3 - Change injectors (see data tables, page 24).

4 - Screw new injectors (Rep.3), replace the gaskets (Rep.4) and check air tightness. **Injectors have to be screwed without any path.**

5 - Refit the gas manifold. When connecting the gas line, do not forget (or damage) the 0 ring of the flange.

6 - **Check air tightness.**

7 - Adjust the pressure on the regulator.

.

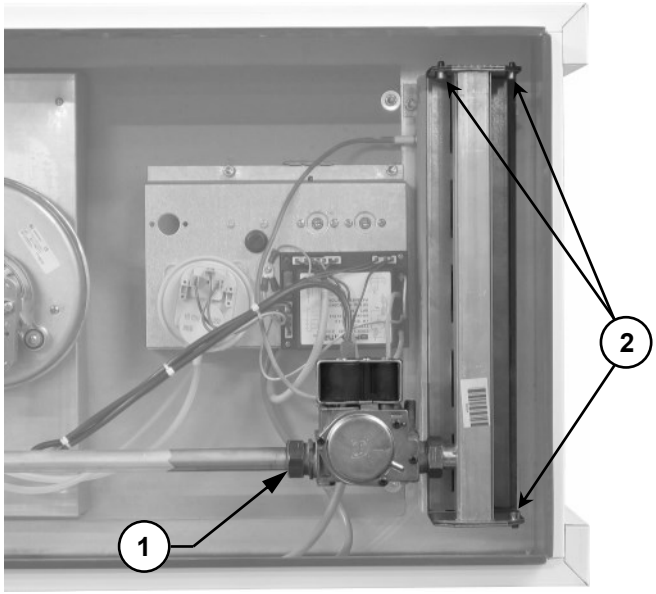

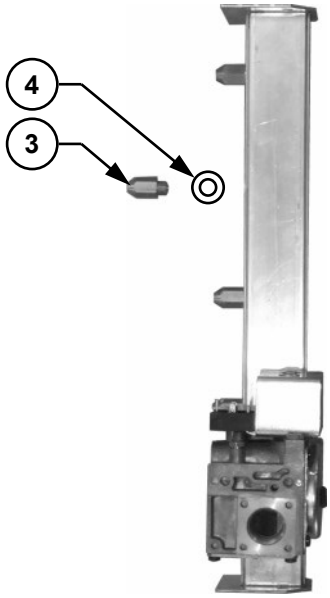

CAUTION: Electrical and gas supplies have to be switched off

Do gas pressure adjustment when burner in operation

Do gas pressure adjustment as follow:

1– Remove the protection of the gas valve pressure adjustment screw.

2– Unscrew pressure test point and put the manometer (5)

3- Adjust manifold pressure(6), according the table data.

3– **After adjustment, do not forget to put back the protection screw and to switch off the pressure intake.**

4 - **Check air tightness after adjustment.**

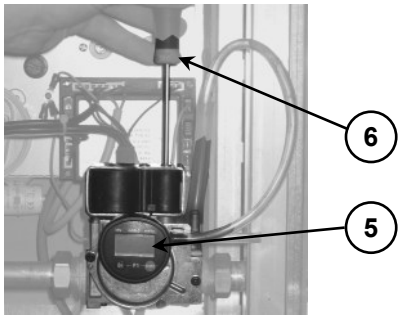

6-2 Set up table for gas valve

Type	Settings for Natural Gas G20				Settings for Natural Gas G25				Settings for Propane G31			
	Gas pressure		Injectors	Air dia-phragm	Gas pressure		Injectors	Air dia-phragm	Gas pressure		Injectors	Air dia-phragm
	1st stage	2nd Stage			1st stage	2nd stage			1st stage	2nd stage		
M 16 Eco	4,6 mbar	7 mbar	4 x AL 1.90	45	6,1 mbar	9,3 mbar	4 x AL 1.90	45	12,8 mbar	19,4 mbar	4 x AL 1.10	45
M 21 Eco	5,9 mbar	9 mbar	5 x AL 1.90	45	7,9 mbar	12 mbar	5 x AL 1.90	45	16,5 mbar	25 mbar	5 x AL 1.10	45
M 28 Eco	4,1 mbar	6,2 mbar	6 x AL 2.20	40	5,5 mbar	8,3 mbar	6 x AL 2.20	40	11,4 mbar	17,2 mbar	6 x AL 1.30	40
M 35 Eco	4,8 mbar	7,3 mbar	7 x AL 2.20	27	6,4 mbar	9,7 mbar	7 x AL 2.20	27	13,4 mbar	20,3 mbar	7 x AL 1.30	27
M 50 Eco	5,0 mbar	7,5 mbar	10xAL 2.20	30	6,6 mbar	10 mbar	10xAL 2.20	30	13,7 mbar	20,8 mbar	10xAL 1.30	30
M 60 Eco	5,1 mbar	7,8 mbar	12xAL 2.20	30	6,9 mbar	10,4 mbar	12xAL 2.20	30	14,3 mbar	21,7 mbar	12xAL 1.30	30
M 80 Eco	5,4 mbar	8,2 mbar	16xAL 2.20	35	7,2 mbar	10,9 mbar	16xAL 2.20	35	15 mbar	22,8 mbar	16xAL 1.30	35

Gas valve Minigaz Eco 16 to 60

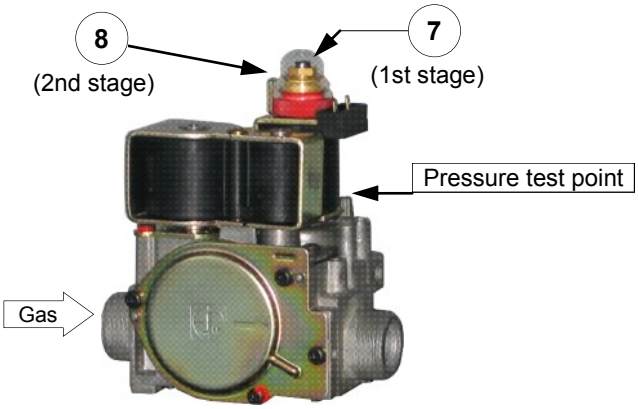

Gas valve Minigaz Eco 80

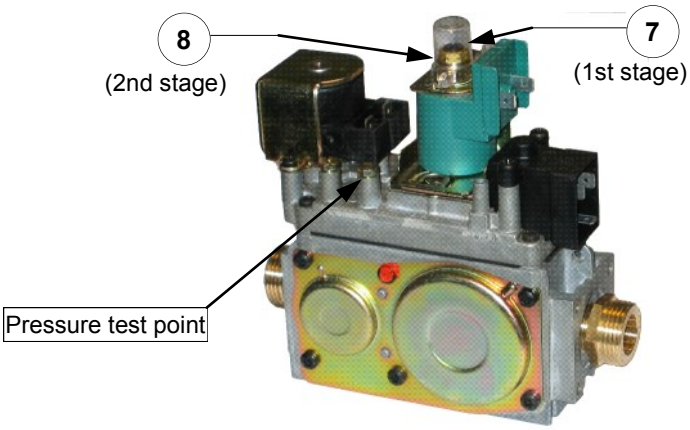

7– GAS CONNECTION

The sizing of the gas network has to be done according the length of the pipes and the type of gas that will be distributed.
Pressures drop shall not exceed 5% of the network pressure.
Gas connections have to be done according local regulation.

7-1 Connection of Gas air heaters

Inlet pressure is 20 mbar for Natural Gas and 37 mbar for Propane.

1°/ **If the network pressure is equal to the requested inlet pressure of gas air blowers :** :
- in that case install an isolating valve (1) and a filter (2) for each Minigaz.

2°/ **if the network pressure is higher than the requested inlet pressure of gas air blowers** :
- in that case install a isolating valve (1), a filter (2) and a pressure reducer (3) for each Minigaz.

CAUTION: Any higher pressure could destroy the Minigaz gas valve.

To connect the Minigaz to the gas network, use connector (4) and gasket (5) provided with the Minigaz. **Screw the connector on the network before connecting it to the Minigaz.**

Check air tightness of the network till the Minigaz gas valve (above drawing).

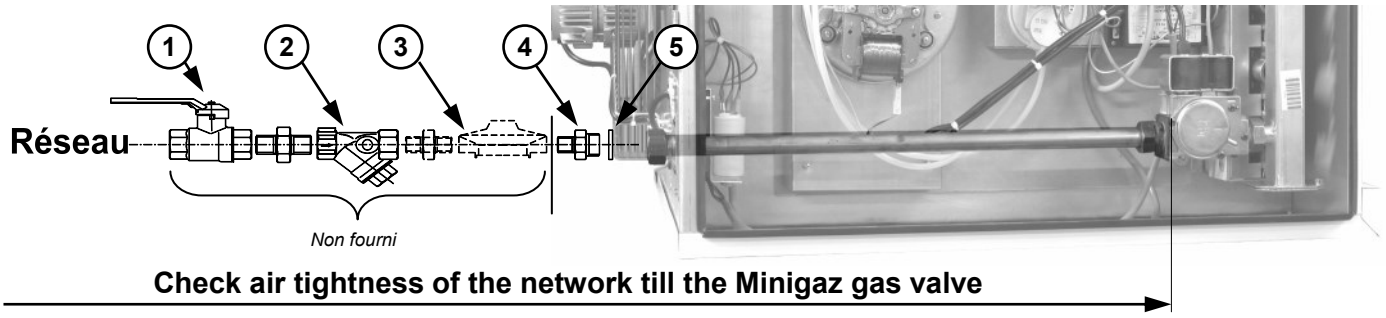

8– COMMISSIONING OF GAS AIR HEATERS

8-1 Working principle:

1– For the commissioning, thermostat shall be on.

The safety relay checks if the lack air pressure switch is on, and then allows the fan starting. The running of the fan is monitored by this pressure switch. If any air lack occurs, it will stop the cycle of the safety relay.

2- After the pre-ventilation cycle, the light-up electrode is on and the gas valve is opened.

3- If there is no flame detected by the ionisation electrode, a new fire sequence will be done by the safety relay - if not successful the burner is locked out and requires a manual reset.

4- Once the burner is going on, the fan is started as soon as air temperature reach the set point of the fan pressure switch (30°C à 35°C).

5- In case of fan failure, the overheat pressure switch will switch off the burner if the temperature exceeds 90°C.

CAUTION :
Never switch off the gas air blower before the exhaust fan is stopped. It could damage the heat exchanger and invalidate the warranty.

8-2 Spare parts list

M Eco 16 and M Eco 50-60-80

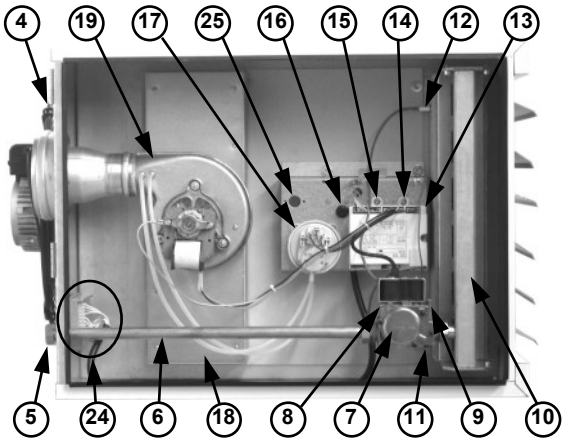

M Eco 21-28-35

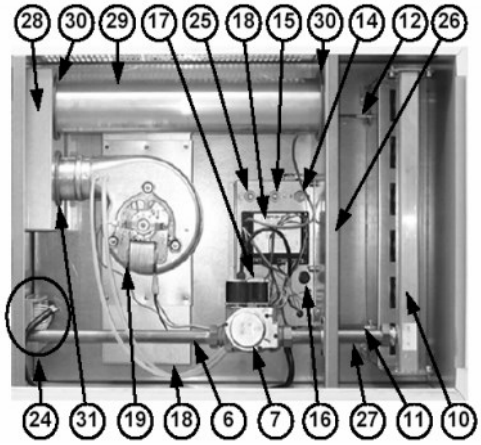

Details of RFP board (24)

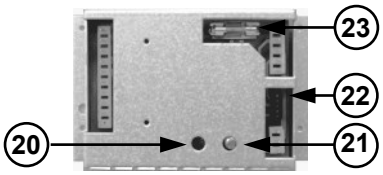

Connection M Eco 16 to 35

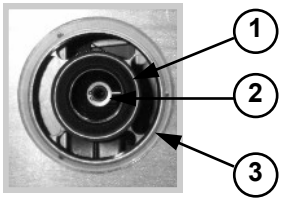

Connection M Eco 50 to 80

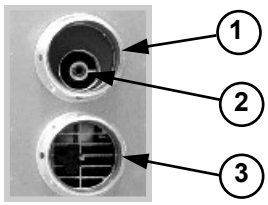

Nº	Components	Spare parts references						
		M 16 Eco	M 21 Eco	M 28 Eco	M 35 Eco	M 50 Eco	M 60 Eco	M 80 Eco
1	By products outlet	———						
2	Air diaphragm							
3	Air inlet	———						
4	Axial fan for MH/MV models	3510070	3510061	3510072	3510073	3510074	3510066	3510075
	Centrifugal fan for MC models		3510012	3510013		3510015	3510305	
5	Gas inlet	3510017					3510018	
6	Gas line							
7	Gas valve with pressure regulator	3510323						3510027
8	Upstream burner gas pressure test point	———						
9	Gas manifold pressure test point	———						
10	Gas manifold	———						
11	Light-up electrode	3510029						
12	Ionisation electrode	3510030				3510031		
13	Burner safety relay	3510219						
14	Thermostat—burner control (65°C)	3510033						
15	Thermostat–fan (30 à 35°C)	3510033						
16	Overheat thermostat (90°C)	3510034						
17	Air pressure switch –lack air	3510035						
18	Smoke box	———						
	Smoke box gasket	3510405	3510400			3510402	3510406	3510407
19	Exhaust fan	3510042			3510043		3510044	3510045
20	Fault indicator light	———						
23	Fuse 6,3 A	———						
24	Pilot receiver RFP5	3510221						
25	2nd stage thermostat (35 to 40°C)	3510033						
27	Gas pipe	—-				—-	—-	—-
30	Silicone gasket diam. 80	—-				—--	—-	—-
31	Silicone gasket diam. 65	—-				—-	—-	—-

9-MAINTENANCE

Correct and regular use and maintenance of the Gas air heater determines rational and efficient operation, minimum gas consumption and long service life.
Maintenance shall be operated when the heat exchanger is cold, gas and electrical supplies switched off.

These operations have to done by qualified people.

Parts	Maintenance
Gas air blower	Check all safety switches and screws tightening
Heat exchanger, exhaust fan & venturi	Clean the heat exchanger after having dismantled the gas manifold, exhaust fan and smoke box. Clean the exhaust fan by the back side of the gas air blower.
Exhaust fan	Clean with compressed air
Flue pipes	Dismantle the flue, check it and clean it if necessary
Casing and outlet louvers	Give them a wipe
Burner	Remove the gas manifold, check it and clean it
Injectors	Check them and clean them
Ionisation & light-up electrodes	Check them and replace if necessary
Gas filters	Remove and clean it with compressed air or replace if necessary.

10– RECOMMENDATION FOR END USER

CAUTIONS :
- Ensure that air inlet and exhaust flue pipes are free from obstructions.
- Do not modify gas air blowers .
- Never spray water on the appliances
- If a gas nature, pressure gas or electrical voltage supply modification is required, contact a qualified technician.

A maintenance contract is recommended. Contact your installer.

What to do in case of fault?

FAULTS	SOLUTION
Gas odour	***- Switch off the main gas valve and electrical supply. Call a qualified technician..***
Burner in safety mode *(Default burner light is on)*	***- Push on the burner reset switch*** ***- If no restart, call a qualified technician .***

11– FAULT FINDING

In Case of problem, check that the preliminary conditions of operation are fulfilled;
If the control box is faulty (burner signal lamp switched on), reset it.

CAUTION: Before any electrical or mechanical maintenance operation, switch off electrical and gas supply.

Faults	Causes	Solutions
Gas air heater does not start	- Wiring mistake - Voltage lack - Ambient air thermostat not in operation - Overheat air pressure switch is on	- Check wiring - Check voltage supply - Increase set point of the ambient air thermostat - Reset the air pressure switch
Continuous pre-ventilation mode of the exhaust fan	- Exhaust fan out of order - Pressure switch disconnected - Pressure switch out of order	- Replace the exhaust fan - Reconnect the pressure test pipes - Replace pressure switch
Light-up electrode runs normally, burner is also running but burner safety relay is on security mode (signal light on)	- Faulty gas valve - Faulty burner safety relay - Faulty ionisation electrode or bad adjustment of it - Air in gas pipes - No gas	- Replace it - Replace it - Adjust or replace it - Purge the gas pipes - Check gas pressure
Appliance on safety mode (red light on)	- No gas supply	- Reset the red button on the safety relay
Cold air when fan operating	- Bad adjustment of the fan air pressure switch	- Adjust the set point of the air pressure switch (35°C)
Insufficient heat output	- Bad position of ambient air thermostat - Bad adjustment of the thermostat - Lack of gas pressure - inappropriate injectors	- Install it in an appropriate position - Adjust the set point of the thermostat - Check gas pressure - Select the good injectors and replace them
Air heater always in operation	- Thermostat set point too high or out of order - Wiring mistake	- Adjust the set point temperature or replace it - Check the wiring

Model: **MH16 Eco**								
B1 warm air heater: [no]								
C2 warm air heater: [no]								
C4 warm air heater: [no]								
Type of fuel: [gas]								
Item	Symbol	Value	Unit		Item	Symbol	Value	Unit
Capacity					Useful efficiency			
Rated heating capacity	$P_{rated,h}$	13,1	kW		Useful efficiency at rated heating capacity	η_{nom}	83,3	%
Minimum capacity	P_{min}	10,5	kW		Useful efficiency at minimum capacity	η_{pl}	82,8	%
Electric power consumption					Other items			
At rated heating capacity	el_{max}	0,055	kW		Envelope loss factor	F_{env}	0,0	%
At minimal capacity	el_{min}	0,055	kW		Ignition burner power consumption	P_{ign}	0,0	kW
In standby mode	el_{sb}	0,000	kW					
					Emission efficiency	$\eta_{s,flow}$	93,2	%
					Seasonal space heating energy efficiency	$\eta_{s,h}$	72,3	%
Contact details	SOLARONICS Chauffage SAS 78 rue du Kemmel – CS20302 – 59429 ARMENTIERES CEDEX France							

Model: **MH21 Eco, MC21 Eco**								
B1 warm air heater: [no]								
C2 warm air heater: [no]								
C4 warm air heater: [no]								
Type of fuel: [gas]								
Item	Symbol	Value	Unit		Item	Symbol	Value	Unit
Capacity					Useful efficiency			
Rated heating capacity	$P_{rated,h}$	18,5	kW		Useful efficiency at rated heating capacity	η_{nom}	83,3	%
Minimum capacity	P_{min}	14,8	kW		Useful efficiency at minimum capacity	η_{pl}	82,8	%
Electric power consumption					Other items			
At rated heating capacity	el_{max}	0,055	kW		Envelope loss factor	F_{env}	0,0	%
At minimal capacity	el_{min}	0,055	kW		Ignition burner power consumption	P_{ign}	0,0	kW
In standby mode	el_{sb}	0,000	kW					
					Emission efficiency	$\eta_{s,flow}$	92,7	%
					Seasonal space heating energy efficiency	$\eta_{s,h}$	72,6	%
Contact details	SOLARONICS Chauffage SAS 78 rue du Kemmel – CS20302 – 59429 ARMENTIERES CEDEX France							

Model: **MH28 Eco, MC28 Eco**								
B1 warm air heater: [no]								
C2 warm air heater: [no]								
C4 warm air heater: [no]								
Type of fuel: [gas]								
Item	Symbol	Value	Unit		Item	Symbol	Value	Unit
Capacity					Useful efficiency			
Rated heating capacity	$P_{rated,h}$	25,0	kW		Useful efficiency at rated heating capacity	η_{nom}	83,3	%
Minimum capacity	P_{min}	20,0	kW		Useful efficiency at minimum capacity	η_{pl}	82,8	%
Electric power consumption					Other items			
At rated heating capacity	el_{max}	0,055	kW		Envelope loss factor	F_{env}	0,0	%
At minimal capacity	el_{min}	0,055	kW		Ignition burner power consumption	P_{ign}	0,0	kW
In standby mode	el_{sb}	0,000	kW					
					Emission efficiency	$\eta_{s,flow}$	92,6	%
					Seasonal space heating energy efficiency	$\eta_{s,h}$	72,3	%
Contact details	SOLARONICS Chauffage SAS 78 rue du Kemmel – CS20302 – 59429 ARMENTIERES CEDEX France							

Model: **MH35 Eco, MC35 Eco, MV35 Eco**								
B1 warm air heater: [no]								
C2 warm air heater: [no]								
C4 warm air heater: [no]								
Type of fuel: [gas]								
Item	Symbol	Value	Unit		Item	Symbol	Value	Unit
Capacity					Useful efficiency			
Rated heating capacity	$P_{rated,h}$	31,5	kW		Useful efficiency at rated heating capacity	η_{nom}	83,3	%
Minimum capacity	P_{min}	25,2	kW		Useful efficiency at minimum capacity	η_{pl}	82,8	%
Electric power consumption					Other items			
At rated heating capacity	el_{max}	0,080	kW		Envelope loss factor	F_{env}	0,0	%
At minimal capacity	el_{min}	0,080	kW		Ignition burner power consumption	P_{ign}	0,0	kW
In standby mode	el_{sb}	0,000	kW					
					Emission efficiency	$\eta_{s,flow}$	92,5	%
					Seasonal space heating energy efficiency	$\eta_{s,h}$	72,2	%
Contact details	SOLARONICS Chauffage SAS 78 rue du Kemmel – CS20302 – 59429 ARMENTIERES CEDEX France							

Model: **MH50 Eco, MC50 Eco, MV50 Eco**								
B1 warm air heater: [no]								
C2 warm air heater: [no]								
C4 warm air heater: [no]								
Type of fuel: [gas]								
Item	Symbol	Value	Unit		Item	Symbol	Value	Unit
Capacity					Useful efficiency			
Rated heating capacity	$P_{rated,h}$	46,3	kW		Useful efficiency at rated heating capacity	η_{nom}	83,3	%
Minimum capacity	P_{min}	37,0	kW		Useful efficiency at minimum capacity	η_{pl}	82,8	%
Electric power consumption					Other items			
At rated heating capacity	el_{max}	0,080	kW		Envelope loss factor	F_{env}	0,0	%
At minimal capacity	el_{min}	0,080	kW		Ignition burner power consumption	P_{ign}	0,0	kW
In standby mode	el_{sb}	0,000	kW					
					Emission efficiency	$\eta_{s,flow}$	93,0	%
					Seasonal space heating energy efficiency	$\eta_{s,h}$	72,8	%
Contact details	SOLARONICS Chauffage SAS 78 rue du Kemmel – CS20302 – 59429 ARMENTIERES CEDEX France							

Model: **MH60 Eco, MC60 Eco, MV60 Eco**								
B1 warm air heater: [no]								
C2 warm air heater: [no]								
C4 warm air heater: [no]								
Type of fuel: [gas]								
Item	Symbol	Value	Unit		Item	Symbol	Value	Unit
Capacity					Useful efficiency			
Rated heating capacity	$P_{rated,h}$	55,5	kW		Useful efficiency at rated heating capacity	η_{nom}	83,3	%
Minimum capacity	P_{min}	44,4	kW		Useful efficiency at minimum capacity	η_{pl}	82,8	%
Electric power consumption					Other items			
At rated heating capacity	el_{max}	0,100	kW		Envelope loss factor	F_{env}	0,0	%
At minimal capacity	el_{min}	0,100	kW		Ignition burner power consumption	P_{ign}	0,0	kW
In standby mode	el_{sb}	0,000	kW					
					Emission efficiency	$\eta_{s,flow}$	92,9	%
					Seasonal space heating energy efficiency	$\eta_{s,h}$	72,7	%
Contact details	SOLARONICS Chauffage SAS 78 rue du Kemmel – CS20302 – 59429 ARMENTIERES CEDEX France							

Model: **MH80 Eco, MC80 Eco, MV80 Eco**								
B1 warm air heater: [no]								
C2 warm air heater: [no]								
C4 warm air heater: [no]								
Type of fuel: [gas]								
Item	Symbol	Value	Unit		Item	Symbol	Value	Unit
Capacity					Useful efficiency			
Rated heating capacity	$P_{rated,h}$	74,0	kW		Useful efficiency at rated heating capacity	η_{nom}	83,3	%
Minimum capacity	P_{min}	59,2	kW		Useful efficiency at minimum capacity	η_{pl}	82,8	%
Electric power consumption					Other items			
At rated heating capacity	el_{max}	0,150	kW		Envelope loss factor	F_{env}	0,0	%
At minimal capacity	el_{min}	0,150	kW		Ignition burner power consumption	P_{ign}	0,0	kW
In standby mode	el_{sb}	0,000	kW					
					Emission efficiency	$\eta_{s,flow}$	93,2	%
					Seasonal space heating energy efficiency	$\eta_{s,h}$	72,8	%
Contact details	SOLARONICS Chauffage SAS 78 rue du Kemmel – CS20302 – 59429 ARMENTIERES CEDEX France							

ZI n°3, 78 rue du Kemmel – CS 20302
59429 ARMENTIÈRES Cedex – FRANCE
Tél. : +33(0) 3 20 10 59 59
Fax : +33(0) 3 20 35 57 22

www.solaronics.com